Volume I – Minimum Technical Requirements

Chapter 1 - Introduction 1-1

1.1 Purpose 1-1
1.2 How to Use this Volume 1-1

Chapter 2 - Minimum Requirements for New Development and Redevelopment 2-1

2.1 Applicability of the Minimum Requirements 2-1
2.1.1 ....New Development and Redevelopment 2-1
2.1.2 ....Additional Requirements for Redevelopment Sites 2-2
2.1.3 ....Supplemental Information for New Development and Redevelopment 2-2
2.1.4 ....Low Impact Development 2-2
2.1.5 ....Exemptions 2-3
2.1.6 ....Public Drainage Facilities 2-3
2.2 Minimum Requirements 2-6
2.2.1 ....Minimum Requirement #1: Stormwater Site Plan Preparation 2-6
2.2.2 ....Minimum Requirement #2: Construction Stormwater Pollution Prevention 2-6
2.2.3 ....Minimum Requirement #3: Source Control of Pollution 2-8
2.2.4 ....Minimum Requirement #4: Preservation of Natural Drainage Systems and Outfalls 2-8
2.2.5 ....Minimum Requirement #5: On-site Stormwater Management 2-9
2.2.6 ....Minimum Requirement #6: Runoff Treatment 2-9
2.2.7 ....Minimum Requirement #7: Flow Control 2-12
2.2.8 ....Minimum Requirement #8: Wetlands Protection 2-14
2.2.9 ....Minimum Requirement #9: Operation and Maintenance 2-15
2.3 Adjustments 2-15
2.4 Exceptions/Variances 2-15

Chapter 3 - Preparation of Stormwater Site Plans 3-1

3.1 Stormwater Site Plan Contents 3-1
3.1.1 ....Standard Stormwater Site Plans 3-1
3.2 Stormwater Site Plan Development: Step-By-Step 3-2
3.2.1 ....Step 1 – Conduct a Site Assessment 3-2
3.2.2 ....Step 2 – Determine if any Special Studies and/or Reports are needed 3-3
3.2.3 ....Step 3 – Determine if any Other Permits are required for the site 3-3
3.2.4 ....Step 4 – Prepare a Site Development Plan 3-3
3.2.5 ....Step 5 – Determine the site's threshold discharge areas 3-4
3.2.6 ....Step 6 – Develop a Permanent Stormwater Control Plan 3-5
3.2.7 ....Step 7 – Develop a Construction Stormwater Pollution Prevention Plan 3-8
3.2.8 ....Step 8 – Develop a Source Control Plan 3-8
3.2.9 ....Step 9 – Develop a Project Description 3-9
3.2.10 ..Step 10 – Compile the Stormwater Site Plan 3-9

Chapter 4 - Runoff Treatment Facility Selection Process 4-1

4.1 Step 1: Determine the pollutants of concern 4-1
4.2 Step 2: Determine whether the facility will be City-owned or privately owned 4-1
4.3 Step 3: Determine whether an Oil Control facility/device is required 4-3
4.4 Step 4: Determine whether infiltration for pollutant removal is practicable 4-3
4.5 Step 5: Determine whether Phosphorus Control is required 4-4
4.6 Step 6: Determine whether Enhanced Treatment is required 4-5
4.7 Step 7: Select a Basic Treatment Facility 4-6

Chapter 5 - Hydrologic Analysis and Design Standards 5-1

5.1 Minimum Computational Standards 5-1
5.2 Western Washington Hydrology Model 5-2
5.3 Rational Method 5-2
5.4 Single Event Hydrograph Method 5-3
5.4.1 ....Design Storm Hyetograph 5-4
5.4.2 ....Runoff Parameters 5-4
5.4.3 ....Hydrograph Synthesis 5-10
5.4.4 ....Hydrograph Routing 5-11
5.4.5 ....Hydrograph Summation and Phasing 5-11
5.4.6 ....Volume Correction Factor 5-12
5.5 Closed Depression Analysis 5-13

Chapter 6 - Conveyance Systems and Hydraulic Structures 6-1

6.1 Overview 6-1
6.2 Design Flows 6-1
6.3 Conveyance System Location 6-1
6.4 Pipe System Design Criteria 6-1
6.4.1 ....Analysis Methods 6-1
6.4.2 ....Acceptable Pipe Sizes 6-2
6.5 Flow Splitter Designs 6-3
6.6 Energy Dissipation at Outfalls 6-3
6.7 Tightline Systems 6-5
6.8 Flow Spreading Options 6-5
6.8.1 ....General Design Criteria 6-5
6.9 Culverts 6-9
6.9.1 ....Culvert Design Criteria 6-9
6.9.2 ....Fish Passage Criteria 6-11
6.10 Open Conveyances 6-11
6.11 Private Drainage Systems 6-11
6.11.1 ..Discharge Locations 6-11
6.11.2 ..Drainage Stub-Outs 6-12

Figures

Figure 2.1 Flow Chart for Determining Requirements for New Development and Redevelopment.....2-4
Figure 2.2 Flow Chart for Determining Additional Requirements for Redevelopment.....2-5
Figure 4.1 Treatment Facility Selection Flow Chart.....4-2
Figure 5.1 Volume Correction Factor.....5-13
Figure 6.1 Flow Spreader – Anchored Plate.....6-6
Figure 6.2 Flow Spreader – Concrete Sump Box.....6-7
Figure 6.3 Flow Spreader – Notched Curb Spreader.....6-8
Figure 6.4 Flow Spreader – Through Curb Ports.....6-9

Tables

Table 2.1 Treatment Requirements by Threshold Discharge Area.....2-10
Table 2.2 Flow Control Requirements by Threshold Discharge Area.....2-12
Table 3.1 Treatment Facility Placement in Relation to Detention.....3-7
Table 4.1 Oil Treatment Menu.....4-3
Table 4.2 Phosphorus Treatment Menu.....4-5
Table 4.3 Enhanced Treatment Menu.....4-6
Table 4.4 Basic Treatment Menu.....4-7
Table 6.1 Recommended Manning's “n” Values for Preliminary Pipe Design.....6-3
Table 6.2 Rock Protection at Outfalls.....6-4
Table 6.3 Open Conveyance Protection.....6-10

Chapter 1 - Introduction

1.1 Purpose

The purpose of this volume of the manual is to present the minimum technical requirements for stormwater management in the City of Everett. These minimum technical requirements address the following areas:

Chapter 2 – Minimum Requirements for New Development and Redevelopment

Chapter 3 – Preparation of Stormwater Site Plans

Chapter 4 – Runoff Treatment Facility Selection

Chapter 5 – Hydrologic Analysis and Design Standards

Chapter 6 – Conveyance Systems and Hydraulic Structures

1.2 How to Use this Volume

Chapter 2 is used to determine the minimum stormwater management requirements that apply to a particular development or redevelopment project, depending upon the type and size of the project.

For projects exceeding certain thresholds of size and type of land use, Stormwater Site Plans must be developed in accordance with requirements in Chapter 3 and Runoff Treatment Facilities selected in accordance with Chapter 4.

Chapter 5 presents the minimum requirements for hydrologic analysis and design of stormwater management facilities and gives the types of analyses that must be used, depending upon the part of the system being designed and the size of the site.

The minimum requirements for conveyance systems are covered in Chapter 6, as are hydraulic structures that are typical components of stormwater facility design.

Chapter 2 - Minimum Requirements for New Development and Redevelopment

2.1 Applicability of the Minimum Requirements

The minimum requirements that apply to any particular development or redevelopment project depend upon the project's type and size. This section identifies the thresholds that determine the applicability of the minimum requirements to different projects. The flow charts in Figures 2.1 and 2.2 can also be used to determine which requirements apply.

The minimum requirements are:

1. Stormwater site plan preparation
2. Construction stormwater pollution prevention
3. Pollution source control
4. Natural drainage systems and outfalls preservation
5. On-site stormwater management
6. Runoff treatment
7. Flow control
8. Wetlands protection
9. Operation and maintenance

These minimum requirements are presented in more detail in Chapter 2.3.

Note: For definitions related to the minimum requirements (redevelopment, converted pervious surface, pollutant generating surface etc.) refer to the glossary at the end of this manual.

2.1.1 New Development and Redevelopment

All new development and redevelopment shall comply with Minimum Requirement #2. In addition, all new development and redevelopment that exceeds certain thresholds shall comply with additional Minimum Requirements as follows.

The following new development and redevelopment must comply with Minimum Requirements #1 through #5 for the new and replaced impervious surfaces and the land disturbed:

- Creates or adds 2,000 square feet, or greater, of new, replaced, or total of new plus replaced impervious surface area, or
- Has land-disturbing activity of 7,000 square feet or greater.

The following new development and redevelopment shall also comply with Minimum Requirement #6 for the new and replaced pollutant generating impervious surfaces:

- Creates or adds 5,000 square feet or more of new, replaced, or total of new plus replaced pollutant generating impervious surfaces.

The following new development and redevelopment shall also comply with Minimum Requirements #7 through #9 for the new impervious surfaces and the converted pervious surfaces:

- Creates or adds 5,000 square feet or more of new impervious surfaces, or

- Converts 3/4 acres, or more, of native vegetation to lawn or landscaped areas, or
- Converts 2.5 acres, or more, of native vegetation to pasture.

2.1.2 Additional Requirements for Redevelopment Sites

For redevelopment projects that disturb an acre or more of land, or that are part of a larger common plan of development or sale that disturbs an acre or more of land, the following additional requirements apply:

- For road related projects, runoff from the replaced and new impervious surfaces (including pavement, shoulders, curbs, and sidewalks) shall meet all the Minimum Requirements if the new impervious surfaces total 5,000 square feet or more and total 50% or more of the existing impervious surface within the project limits. The project limits shall be defined as the length of the project and the width of the right-of-way.
- Other types of redevelopment projects shall comply with all the Minimum Requirements for the new and replaced impervious surfaces if the total of the new plus replaced impervious surface is 5,000 square feet or more and the valuation of the proposed improvements – including interior improvements – exceeds 50% of the assessed value of the existing site improvements.

2.1.3 Supplemental Information for New Development and Redevelopment

If the City determines that the project site contributes to an existing water quality, flooding, or erosion problem, the City may require that the project site comply with additional stormwater management requirements. The City shall base the determination on the results of basin planning for the basin in which the project is located; historic water quality data; or historic information on flooding, erosion, or habitat degradation in receiving waters.

Where development projects require improvements (e.g., frontage improvements) that are not within the same threshold discharge area, the City of Everett may allow the minimum requirements to be met for an equivalent area, with respect to flow and pollution characteristics, that drains to the same receiving water.

If runoff from the new impervious surfaces, replaced impervious surfaces, and converted pervious surfaces is not separated from runoff from other surfaces on the project site, then the stormwater treatment facilities must be sized for the entire flow that is directed to them.

2.1.4 Low Impact Development

Low impact development (LID) is a term used to describe a stormwater management and land development strategy generally employed at the parcel and subdivision scale. LID emphasizes protection and use of on-site, natural stormwater management features (such as areas of permeable soils, depressions, or shallow vegetated swales), integrated with engineered, small-scale hydrologic controls (such as raingardens, roof top dispersion, and porous pavements) to more closely mimic predevelopment hydrologic functions.

At this time, the City has not identified a formal process for designating and designing a project as an LID project. However, the City considers many LID techniques and strategies to be an integral part of intelligent site design and has therefore integrated these techniques and strategies into the steps and processes outlined in this manual. In addition, Minimum Requirement #5 requires the infiltration, dispersion, and retention of stormwater on-site, which is a key component of most LID techniques. Volume III presents specific Low Impact Development and On-site Stormwater Management BMPs.

2.1.5 Exemptions

Forest practices: Forest practices regulated under Title 222 WAC, except for Class IV General forest practices that are conversions from timber land to other uses, are exempt from the provisions of the minimum requirements.

Commercial agriculture: Commercial agriculture practices involving working the land for production are generally exempt. However, the conversion from timberland to agriculture, and the construction of impervious surfaces are not exempt.

Oil and Gas Field Activities or Operations: Construction of drilling sites, waste management pits, and access roads, as well as construction of transportation and treatment infrastructure such as pipelines natural gas treatment plants, natural gas pipeline compressor stations, and crude oil pumping stations are exempt. Operators are encouraged to implement and maintain Best Management Practices to minimize erosion and control sediment during and after construction activities to help ensure protection of surface water quality during storm events.

Road Maintenance: The following road maintenance practices are exempt: pothole and square cut patching, overlaying existing asphalt or concrete pavement with asphalt or concrete without expanding the area of coverage, shoulder grading, reshaping/regrading drainage systems, crack sealing, resurfacing with in-kind material without expanding the road prism, and vegetation maintenance.

The following road maintenance practices are considered redevelopment, and therefore are not categorically exempt. The extent to which the minimum technical requirements apply is explained for each circumstance.

- Removing and replacing a paved surface to base course or lower, or repairing the roadway base: If impervious surfaces are not expanded, Minimum Requirements #1 - #5 apply. However, in most cases, only Minimum Requirement #2, Construction Stormwater Pollution Prevention, will be applicable. Where appropriate, project proponents are encouraged to look for opportunities to use permeable and porous pavements.
- Extending the pavement edge without increasing the size of the road prism, or paving graveled shoulders: These are considered new impervious surfaces and are subject to the minimum requirements that are triggered when the thresholds identified for redevelopment projects are met.
- Resurfacing by upgrading from dirt to gravel, asphalt, or concrete; upgrading from gravel to asphalt, or concrete; or upgrading from a bituminous surface treatment ("chip seal") to asphalt or concrete: These are considered new impervious surfaces and are subject to the minimum requirements that are triggered when the thresholds identified for redevelopment projects are met.

Underground utility projects:

Underground utility projects that replace the ground surface with in-kind material or materials with similar runoff characteristics are only subject to Minimum Requirement #2, Construction Stormwater Pollution Prevention.

2.1.6 Public Drainage Facilities

Drainage facilities conceived, designed, or constructed by or through an agent of the City shall be exempted from the submittal and permitting requirements of this manual. The City shall meet the intent and specific requirements of this manual on all projects relative to drainage or incorporating drainage components and shall maintain records adequate to reflect such compliance. These records shall be available upon request per the State Public Disclosure of Information Act, RCW 42.17.

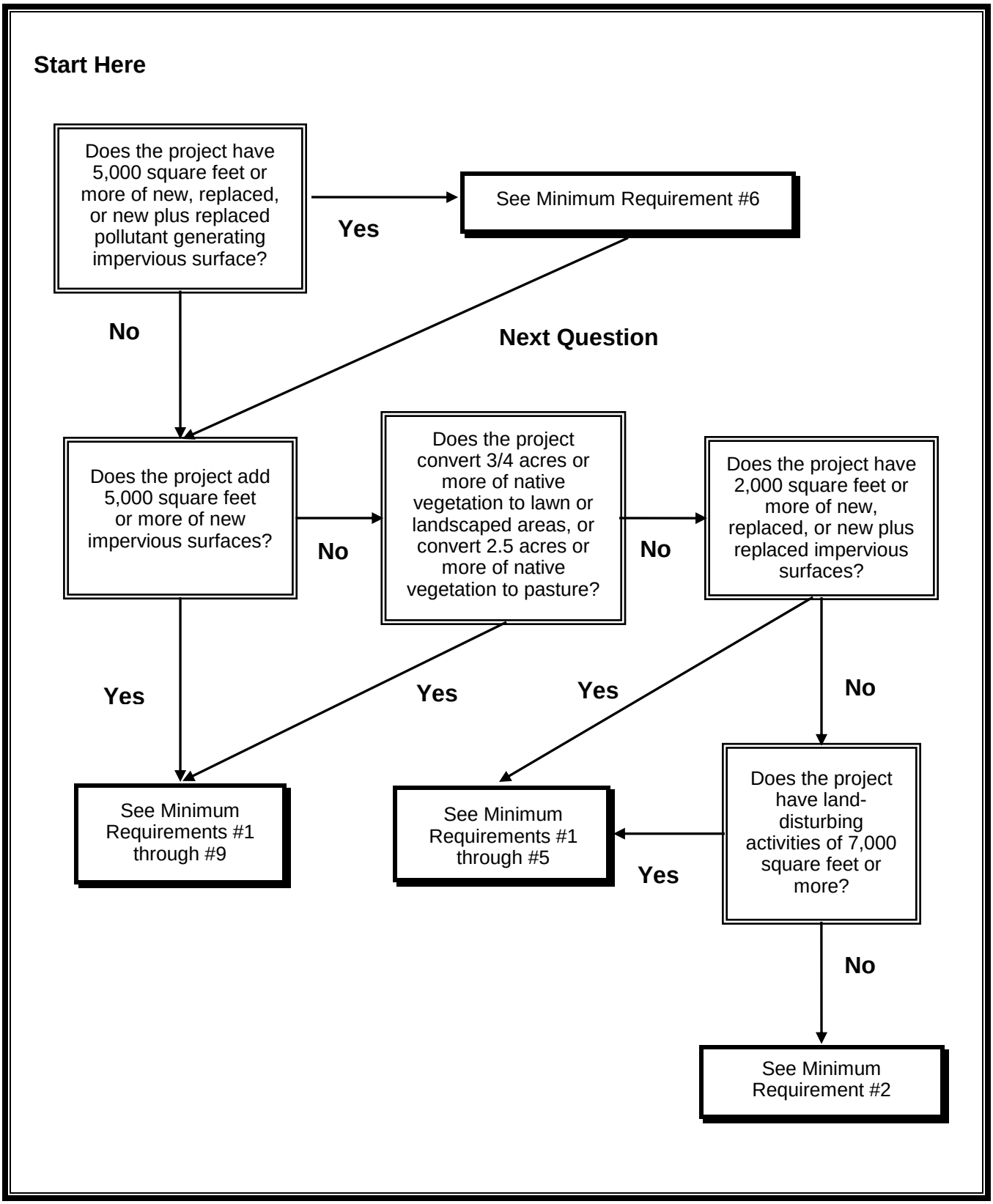

Figure 2.1 Flow Chart for Determining Requirements for New Development and Redevelopment

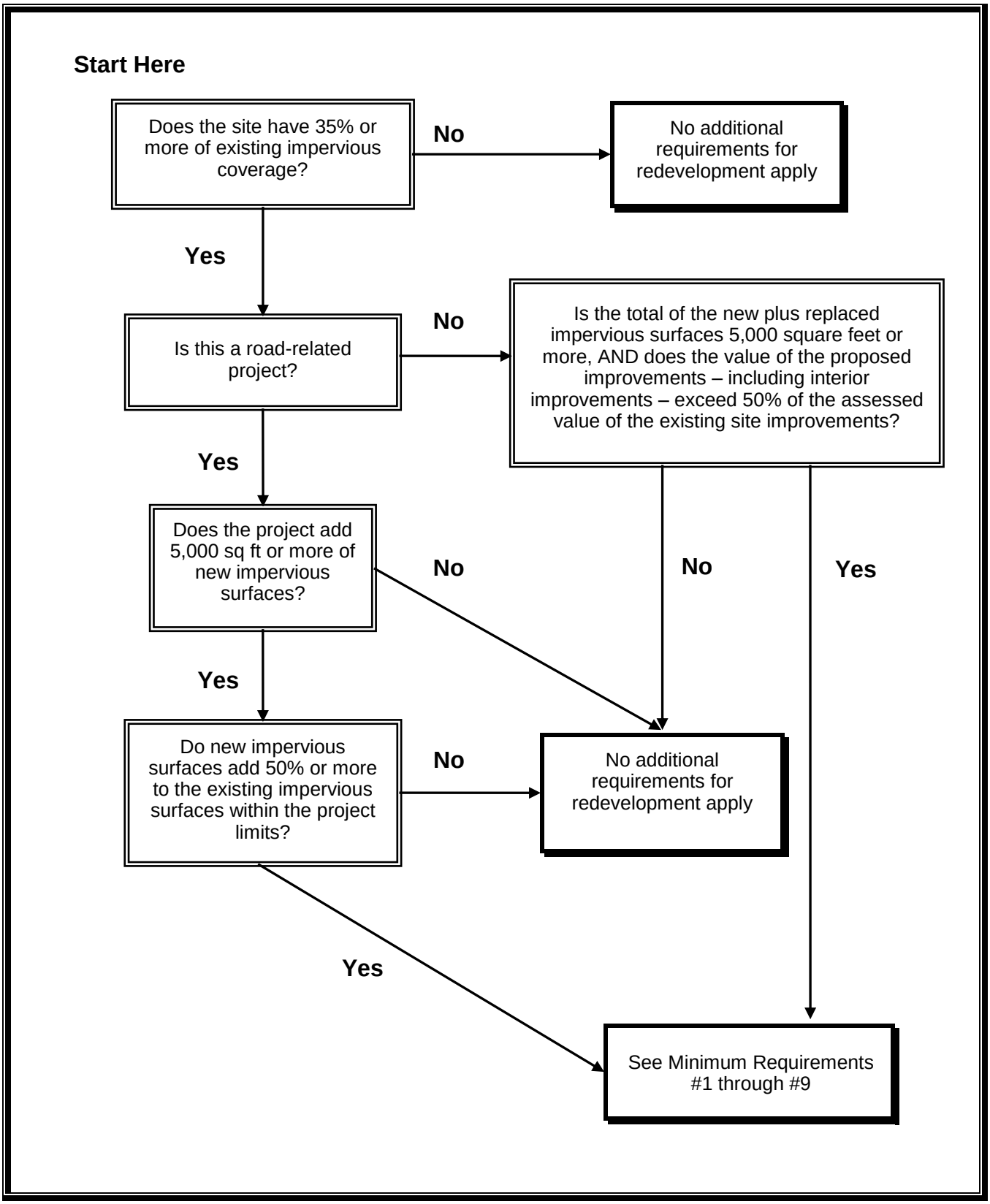

Figure 2.2 Flow Chart for Determining Additional Requirements for Redevelopment

2.2 Minimum Requirements

This section describes the minimum requirements for stormwater management at development and redevelopment sites. Chapter 2.1 gives the information necessary to determine which requirements apply to any given project. Volumes II through IV of this manual present BMPs for use in meeting the minimum requirements.

Some of the minimum requirements are given in terms of threshold discharge areas because project sites may have multiple discharge locations. A ***threshold discharge area*** is defined as an on-site area draining to a single natural discharge location or multiple natural discharge locations that combine within one-quarter mile downstream (as determined by the shortest flow path). The examples in Figure 2.3 below illustrate this definition.

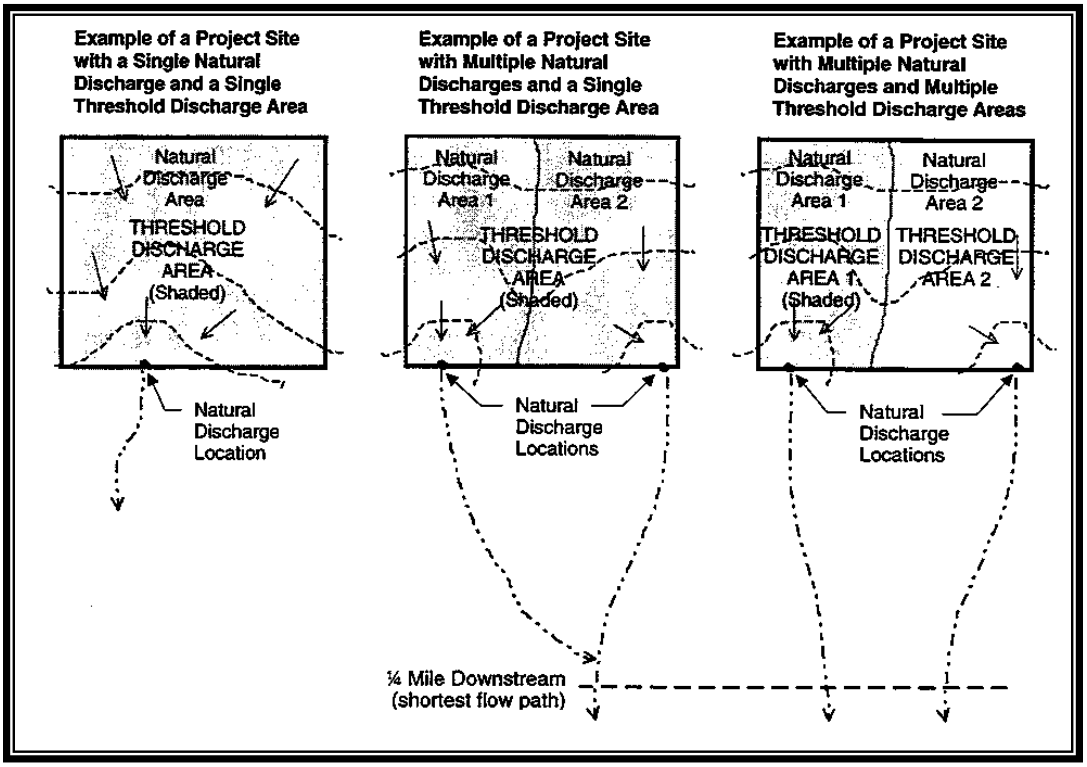

Figure 2.3 Threshold Discharge Areas

2.2.1 Minimum Requirement #1: Stormwater Site Plan Preparation

A Stormwater Site Plan (SSP) shall be prepared for City review and approval. The information required in the SSP varies depending on the nature of the project and its location. Stormwater Site Plans shall be completed in accordance with Chapter 3 of this volume.

2.2.2 Minimum Requirement #2: Construction Stormwater Pollution Prevention

All new development and redevelopment projects are responsible for preventing erosion and discharge of sediment and other pollutants into receiving waters during construction.

The following new and redevelopment shall provide construction stormwater pollution prevention by complying with Small Parcel Requirements #1 through #5 below, and shall submit a small parcel Construction Stormwater Pollution Prevention Plan to the City as set forth in the City's Design and Construction Standards and Specifications, Section 2:

- Single family and duplex lots.
- Projects that have land disturbing activity of less than 1 acre, and that are not part of a larger common plan of development or sale that disturbs an acre or more of land.

The Small Parcel Requirements are:

1. Provision of a construction access route
2. Stabilization of denuded areas
3. Protection of adjacent properties
4. Maintenance of erosion and sediment control BMPs
5. Implementation of other BMPs as determined necessary by the City.

The following new and redevelopment is required to prepare a standard Construction Stormwater Pollution Prevention Plan (C-SWPPP) in accordance with Volume II, Chapter 2:

- Projects which have land disturbing activity of 1 acre or more, or that are part of a larger common plan of development or sale that will disturb an acre or more of land.

General Requirements

The City shall only permit clearing and grading activities for developments if conducted pursuant to an approved site development plan that establishes permitted areas of clearing, grading, cutting, and filling.

When establishing permitted clearing and grading areas, consideration shall be given to minimizing removal of existing trees and minimizing disturbance/compaction of native soils except as needed for building purposes. These permitted clearing and grading areas and any other areas required to preserve critical or sensitive areas, buffers, native growth protection easements, or tree retention areas shall be delineated on the site plans and the development site plan.

Projects that disturb one acre of land or more, or that are part of a larger common plan of development or sale that ultimately disturbs one acre or more (other than single family or duplex building lots), and that discharge stormwater either directly or indirectly to surface waters of the state, must obtain a Construction Stormwater General Permit from the Department of Ecology. Please see Appendix A for more information.

The owner or lessee of the land being developed has the responsibility for C-SWPPP preparation and submission to the City. The owner or lessee may designate someone (i.e., an engineer, architect, contractor, etc.) to prepare the C-SWPPP, but he/she retains the ultimate responsibility.

Seasonal Work Limitations

From October 1 through April 30, clearing, grading, and other soil disturbing activities will only be authorized by the City if silt-laden runoff will be prevented from leaving the site through a combination of the following:

1. Site conditions including existing vegetative coverage, slope, soil type and proximity to receiving waters; and
2. Limitations on activities and the extent of disturbed areas; and

3. Proposed erosion and sediment control measures.

Based on the information provided for a particular site and situation, the City may expand or restrict the seasonal limitation on site disturbance. The following activities are exempt from the seasonal clearing and grading limitations:

- Routine maintenance and necessary repair of erosion and sediment control BMPs,
- Routine maintenance of public facilities or existing utility structures that do not expose the soil or result in the removal of the vegetative cover to soil, and
- Activities where there is one hundred percent infiltration of surface water runoff within the site in approved and installed erosion and sediment control facilities.

Required Construction Stormwater Pollution Prevent Plan Elements

The twelve elements detailed in Volume II, Chapter 2.4 shall be included in the SWPPP and the construction site operator shall ensure that they are implemented unless site conditions render the element unnecessary and the exemption from that element is clearly justified in the SWPPP.

2.2.3 Minimum Requirement #3: Source Control of Pollution

All known, available and reasonable source control BMPs shall be applied to the project. Source control BMPs shall be selected, designed, and maintained according to Volume IV of this manual.

Supplemental Information

An adopted and implemented basin plan or a TMDL (also known as a Water Cleanup Plan) may be used to develop more stringent source control requirements that are tailored to a specific basin.

Source control BMPs include operational BMPs and structural source control BMPs. See Volume IV for design details of these BMPs. For construction sites, see Volume II.

Structural source control BMPs must be identified in the stormwater site plan and shall be shown on site plans submitted to the City for review.

2.2.4 Minimum Requirement #4: Preservation of Natural Drainage Systems and Outfalls

Natural drainage patterns shall be maintained, and discharges from the project site shall occur at the natural location, to the maximum extent practicable, for all projects that meet the thresholds in Chapter 2.1. The manner by which runoff is discharged from the project site must not cause a significant adverse impact to downstream receiving waters and/or down-gradient properties.

When downstream drainage courses are inadequate or systems are undersized, or when, in the opinion of the City, property or properties may be adversely affected by the existing and/or proposed stormwater release rates, additional stormwater flow control measures may be required. Such determination by the City may be based upon existing information indicating problem areas or based upon current or past litigation regarding drainage problems within the vicinity of the project. If additional stormwater flow control measures are required by the City, the applicant may have the option to correct and/or improve downstream drainage conditions so that the proposed stormwater release rate does not have to be further restricted. Any offsite improvements will require the applicant to obtain easements from the owners of any property where work is to take place.

All outfalls require energy dissipation. Requirements for outfall systems to protect against adverse impacts from concentrated runoff are included in this volume, Chapter 6.6.

Supplemental Information

Where no conveyance system exists at the adjacent down-gradient property line and the discharge was previously dispersed flow or significantly lower concentrated flow, then measures shall be taken to prevent down-gradient impacts. Drainage easements from downstream property owners may be needed and shall be obtained prior to approval of engineering plans.

The following discharge requirement applies in these cases:

- If the 100-year frequency peak discharge is less than or equal to 0.5 cubic feet per second under existing conditions and will remain less than or equal to 0.5 cubic feet per second under developed conditions, then the concentrated runoff may be discharged through a dispersal trench or other dispersal system, provided the applicant can demonstrate that there will be no significant adverse impact to downhill properties or drainage systems.
- If the 100-year frequency peak discharge is greater than 0.5 cubic feet per second for either existing or developed conditions, or if a significant adverse impact to down-gradient properties or drainage systems is likely, then a conveyance system must be provided to convey the concentrated runoff to an acceptable discharge point within the same threshold discharge area (i.e., an enclosed drainage system or open drainage feature where concentrated runoff can be discharged without significant adverse impact). Conveyance of concentrated runoff across adjacent properties will require the acquisition of drainage easements.

2.2.5 Minimum Requirement #5: On-site Stormwater Management

On-site stormwater management BMPs shall be provided to infiltrate, retain, and disperse stormwater runoff on-site to the maximum extent feasible without causing flooding or erosion impacts. The on-site stormwater management BMPs in Volume III, Chapter 12 shall be provided, where feasible, to reduce the hydrologic disruption of developed sites.

2.2.6 Minimum Requirement #6: Runoff Treatment

The following projects require design and construction of stormwater treatment facilities (see Table 2.1):

- Projects in which the total of effective, new and/or replaced pollution-generating impervious surface (PGIS) is 5,000 square feet or more in a threshold discharge area of the project, or
- Projects in which the total of new pollution-generating pervious surfaces (PGPS) is three-fourths of an acre or more in a threshold discharge area, and from which there is a surface discharge in a natural or man-made conveyance system from the site.

That portion of any development project in which the above PGIS or PGPS thresholds are not exceeded in a threshold discharge area shall have On-Site Stormwater Management BMPs in accordance with Minimum Requirement #5.

Table 2.1 Treatment Requirements by Threshold Discharge Area

Treatment requirement	<¾ Acres of new PGPS	≥¾ Acres of new PGPS	<5,000 sf of new and/or replaced PGIS	≥5,000 sf of new and/or replaced PGIS
Treatment Facilities		✔		✔
On-site Stormwater BMPs	✔	✔	✔	✔

PGPS = pollution-generating pervious surfaces
PGIS = pollution-generating impervious surfaces
sf = square feet

Treatment-Type Applicability

Oil Control: Treatment to achieve Oil Control shall be applied to projects that have "high-use" areas. High use areas are those that typically generate high concentrations of oil due to high traffic turnover or the frequent transfer of oil. High use areas include:

- An area of a commercial or industrial site subject to an expected average daily traffic (ADT) count equal to or greater than 100 vehicles per 1,000 square feet of gross building area;
- An area of a commercial or industrial site subject to petroleum storage and transfer in excess of 1,500 gallons per year, not including routinely delivered heating oil;
- An area of a commercial or industrial site subject to parking, storage, or maintenance of 25 or more vehicles that are over 10 tons gross weight (trucks, buses, trains, heavy equipment, etc.);
- A road intersection with an ADT count of 25,000 vehicles or more on the main roadway and 15,000 vehicles or more on the intersecting roadway, excluding projects proposing primarily pedestrian or bicycle use improvements.

Phosphorus Treatment: Phosphorus treatment will be required in watersheds designated for phosphorus control by the USEPA, the Department of Ecology, or the City.

Enhanced Treatment: Enhanced treatment for reduction in dissolved metals is required for the following types of projects that will disturb an acre or more of land, or that are part of a larger common plan of development or sale that will disturb an acre or more of land, *and* that discharge to fish-bearing streams, lakes, or to waters or conveyance systems tributary to fish-bearing streams or lakes:

- Industrial project sites (except as noted in basic treatment for landscaped areas and employee private vehicle parking)
- Commercial project sites (except as noted in basic treatment for landscaped areas and employee private vehicle parking)
- Multifamily project sites (except as noted in basic treatment for landscaped areas)
- Arterial roads (AADT of 7,500 or greater)

However, such sites listed above that discharge directly (or, indirectly through a municipal storm sewer system) to the Puget Sound or to the Snohomish River and its estuary are not subject to enhanced treatment requirements.

For developments with a mix of land use types, the enhanced treatment requirement shall apply when the runoff from the areas subject to the enhanced treatment requirement comprises 50 percent or more of the total runoff within a threshold discharge area.

Basic Treatment: Basic treatment generally applies to:

- Project sites that discharge to ground water, UNLESS the project uses infiltration strictly for flow control – not treatment – and the discharge is within one-fourth mile of a phosphorus sensitive lake (phosphorus treatment is required), or within one-fourth mile of a fish-bearing stream or a lake (enhanced treatment is required).
- Residential projects not otherwise needing phosphorus control.
- Projects discharging directly to salt water, the Snohomish River, or the Snohomish River Estuary
- Projects that discharge to streams that are not fish-bearing, or to waters that are not tributary to fish-bearing streams
- Landscaped areas of industrial, commercial, and multi-family project sites and parking lots of industrial and commercial project sites that do not involve pollution-generating sources (e.g., industrial activities, customer parking, storage of erodible or leachable material, wastes or chemicals) other than parking of employee's private vehicles.

For developments with a mix of land use types, the Basic Treatment requirement shall apply when the runoff from the areas subject to the Basic Treatment requirement comprises 50% or more of the total runoff within a threshold discharge area.

Treatment Facility Sizing

Water Quality Design Volume:

The water quality design volume is the volume of runoff predicted from a 24-hour storm with a 6-month return frequency (6-month, 24-hour storm). Alternatively, the 91st percentile, 24-hour runoff volume indicated by an approved continuous simulation runoff model may be used. See Chapter 5 of this volume for more information on minimum technical requirements for hydrological analysis.

Water Quality Design Flow Rate:

The water quality design flow rate depends upon the location of the treatment facilities relative to any detention facilities and the size of the project.

The water quality design flow rate is as follows:

- Preceding detention facilities or when detention facilities are not required: The water quality design flow rate is peak rate of developed runoff from a 6 month, 24-hr storm or the flow rate at or below which 91 percent of the runoff volume will be treated.
- Downstream of detention facilities: The water quality design flow rate is the full 2-year recurrence interval release rate from the detention facility.

When runoff flow rates exceed the water quality design flow rate, the treatment facility shall continue to receive and treat the water quality design flow rate to the applicable treatment performance goal. Only the higher incremental portion of flow rates shall be bypassed around a treatment facility.

Runoff flow rates in excess of the water quality design flow rate can be routed through the treatment facility provided a net pollutant reduction is maintained, and the applicable annual average performance goal is likely to be met.

Treatment Facility Selection, Design, and Maintenance

Stormwater treatment facilities shall be:

- Selected in accordance with the process identified in Chapter 4 of this volume.
- Designed in accordance with the design criteria in Volume III.
- Maintained in accordance with the maintenance schedules in Appendix F.

Additional Requirements

Direct discharge of untreated stormwater from pollution-generating impervious surfaces to groundwater is prohibited, except for the discharge achieved by infiltration or dispersion of runoff from residential sites through use of on-site stormwater management BMPs.

2.2.7 Minimum Requirement #7: Flow Control

The following projects that discharge stormwater directly or indirectly through a conveyance system into a fresh water require construction of flow control facilities and/or land use management BMPs that will achieve the flow discharge requirements given in this section:

- Projects in which the total of effective impervious surfaces is 5,000 square feet or more in a threshold discharge area
- Projects that convert three-fourths of an acre or more of native vegetation to lawn or landscape, or convert 2.5 acres or more of native vegetation to pasture in a threshold discharge area, and from which there is a surface discharge in a natural or man-made conveyance system from the site
- Projects that through a combination of effective impervious surfaces and converted pervious surfaces cause a 0.1 cubic feet per second increase in the 100-year flow frequency from a threshold discharge area.

That portion of any project in which the above thresholds are not exceeded in a threshold discharge area shall have On-Site Stormwater Management BMPs in accordance with Minimum Requirement #5.

Table 2.2 Flow Control Requirements by Threshold Discharge Area

	Flow Control Facilities	On-site Stormwater Management BMPs
<¾ acres conversion of forest to lawn/landscape, or <2.5 acres to pasture		✔
≥¾ acres conversion of forest to lawn/landscape, or ≥2.5 acres to pasture	✔	✔
<5,000 square feet of net new effective impervious area		✔
≥5,000 square feet of net new effective impervious area	✔	✔
≥0.1 cubic feet per second increase in the 100-year flow frequency	✔	✔

Flow Discharge Requirements

For project sites that disturb an acre or more of land, or that are part of larger common plan of development or sale that will disturb an acre or more of land, stormwater discharges shall match developed

discharge durations to predeveloped durations for the range of predeveloped discharge rates from 50 percent of the 2-year recurrence interval peak flow up to the full 50-year peak flow. The predeveloped condition to be matched shall be a forested land cover. An approved continuous simulation model will be used for hydrologic analysis (see Chapter 5).

For sites that will not disturb an acre or more of land, and that are not part of a larger common plan of development or sale that will disturb an acre or more of land, flow control may be provided as above or by limiting the peak developed rate of runoff from the 2-year, 24-hour design storm to 50 percent of the existing condition 2-year, 24-hour design storm while maintaining the existing condition peak runoff rate for the 10-year, 24-hour and 100-year, 24-hour design storms. A correction factor based on the percent impervious of the contributing area shall be applied; see Chapter 5 of this volume for more information.

The flow control requirement is waived for sites that will reliably infiltrate all the runoff from impervious surfaces and converted pervious surfaces.

Flow Control Facility Selection, Design, and Maintenance

Flow control BMPs shall be selected, designed, and maintained according to Volume III of this manual.

Supplemental Information

Reduction of flows through infiltration decreases surface water runoff and helps to maintain base flow throughout the summer months. However, infiltration should only be used where groundwater quality is not threatened by such discharges.

Application of sufficient Low Impact Development techniques and On-Site Stormwater Management BMPs can result in reducing the effective impervious area and the converted pervious areas, thereby reducing or eliminating the need for flow control and treatment facilities. Impervious surfaces that are fully dispersed in accordance with Volume III, Chapter 12 are not considered effective impervious surfaces. Porous pavement, pavers and modular grid pavements are assigned lower surface runoff calibrations and may also reduce stormwater flow control facility sizes.

Exemptions

Flow control is not required for projects that discharge to Port Gardner Bay or to the Snohomish River and its estuary provided that the following restrictions are complied with:

1. Direct discharge to the exempt receiving water does not result in the diversion of drainage from any perennial stream classified as Types 1, 2, 3, or 4 in the State of Washington Interim Water Typing System, or Types “S”, “F”, or “Np” in the Permanent Water Typing System, or from any Category I, II, or III wetland
2. Flow splitting devices or drainage BMPs are applied to route natural runoff volumes from the project site to any downstream Type 5 stream or Category IV wetland.

   The following criteria apply to the design of flow splitting devices *for projects that disturb an acre or more of land, or that are part of a larger common plan of development or sale that will disturb an acre or more of land* :

   a. Design of flow splitting devices or drainage BMPs shall be based on continuous hydrologic modeling analysis. The design will assure that flows delivered to Type 5 stream reaches will approximate, but in no case exceed, durations ranging from 50 percent of the 2-year to the 50-year recurrence interval peak flow.

   b. Flow splitting devices or drainage BMPs that deliver flow to Category IV wetlands shall also be designed using continuous hydrologic modeling to preserve pre-project wetland hydrologic conditions unless specifically waived or exempted by regulatory agencies with permitting jurisdiction.

3. The project site must be drained by a conveyance system that is comprised entirely of manmade conveyance elements (e.g., pipes, ditches, outfall protection, etc.) and extends to the ordinary high water line of the exempt receiving water.
4. The conveyance system between the project site and the exempt receiving water shall have sufficient hydraulic capacity to convey discharges from future build-out conditions (under current zoning) of the site, and the existing condition from non-project areas from which runoff is or will be collected.
5. Any erodible elements of the manmade conveyance system must be adequately stabilized to prevent erosion under the conditions noted above.

If the discharge is to a stream that leads to a wetland, or to a wetland that has an outflow to a stream, both this requirement and Minimum Requirement #8 apply.

Diversions of flow from perennial streams and from wetlands can be considered if significant existing (i.e., pre-project) flooding, stream stability, water quality, or aquatic habitat problems would be solved or significantly mitigated by bypassing stormwater runoff rather than providing stormwater detention and discharge to natural drainage features. Bypassing should not be considered as an alternative to applicable flow control or treatment if the flooding, stream stability, water quality or habitat problem to be solved would be caused by the project.

2.2.8 Minimum Requirement #8: Wetlands Protection

These requirements apply only to projects exceeding the thresholds in Chapter 2.1 with stormwater discharges into a wetland, either directly or indirectly through a conveyance system. These requirements must be met in addition to meeting Minimum Requirement #6: Runoff Treatment.

Thresholds

The thresholds identified in Minimum Requirement #6: Runoff Treatment and Minimum Requirement #7: Flow Control shall also be applied for discharges to wetlands.

Standard Requirement

Discharges to wetlands shall maintain the hydrologic conditions, hydrophytic vegetation, and substrate characteristics necessary to support existing and designated uses. A hydrologic analysis shall be performed in accordance with Guide Sheet 2B in Appendix E to demonstrate that this requirement is met. The hydrologic analysis shall use the existing land cover condition to determine the existing hydrologic conditions unless directed otherwise by a regulatory agency with jurisdiction.

Additional Requirements

Stormwater treatment and flow control facilities shall not be built within a natural vegetated buffer, except for:

- Necessary conveyance systems as approved by the City of Everett.
- As allowed in wetlands approved for hydrologic modification and/or treatment by the City of Everett and any additional regulatory agency with jurisdiction.

Supplemental Information

Guide Sheet 2B in Appendix E is from the publication “Wetlands and Urbanization, Implications for the Future,” the final report of the Puget Sound Wetland and Stormwater Management Research Program in 1997.

Note that if selective runoff bypass is being considered to maintain the hydroperiod, the hydrologic analysis must consider the impacts of the bypassed flow. For instance, if the bypassed flow is eventually directed to a stream, the flow duration standard, Minimum Requirement #7, applies to the bypass.

2.2.9 Minimum Requirement #9: Operation and Maintenance

A Maintenance Plan that is consistent with the provisions in this manual shall be provided for all proposed stormwater facilities and BMPs for projects that exceed the thresholds in Chapter 2.1. The party (or parties) responsible for operation and maintenance shall be identified in the Maintenance Plan. At private facilities, a copy of the Maintenance Plan shall be retained on-site or within reasonable access to the site, and shall be transferred with the property to subsequent owners. For public facilities, a copy of the Maintenance Plan shall be retained in the appropriate department. A tracking system (e.g., log) of maintenance activity that indicates what actions were taken shall be kept and be available for inspection by the City.

Chapter 3.2.6 of this volume outlines additional details applicable to the Maintenance Plan, which is included as part of the Stormwater Site Plan.

2.3 Adjustments

Adjustments to the Minimum Requirements may be granted by the City provided the applicant prepares and the City approves a written finding of fact that addresses the following:

- The adjustment provides substantially equivalent environmental protection.
- The objectives of safety, function, environmental protection and facility maintenance, based on sound engineering practices, are met.

2.4 Exceptions/Variances

The City may grant an exception to the minimum requirements if such application imposes a severe and unexpected economic hardship. To determine whether the application imposes a severe and unexpected economic hardship on the project applicant, the project applicant must consider and document with written findings of fact the following:

1. The current (pre-project) use of the site; and
2. How the application of the minimum requirement(s) restricts the proposed use of the site compared to the restrictions that existed prior to the adoption of the Minimum Requirements; and
3. The possible remaining uses of the site if the exception/variance were not granted; and
4. The uses of the site that would have been allowed prior to the adoption of the Minimum Requirements; and
5. A comparison of the estimated amount and percentage of value loss as a result of the minimum requirements versus the estimated amount and percentage of value loss as a result of requirements that existed prior to adoption of the Minimum Requirements; and
6. The feasibility for the owner to alter the project to apply the Minimum Requirements.

In addition any exception/variation must meet the following criteria:

- The exception will not increase risk to the public health and welfare, nor be injurious to other properties in the vicinity and/or downstream, and to the quality of waters of the state; and
- The exception is the least possible exception that could be granted to comply with the intent of the Minimum Requirements.

For projects that will disturb an acre or more of land, or that are part of a larger common plan of development or sale that will disturb an acre of more of land, exceptions/variances to the Minimum Requirements may only be granted following legal public notice of an application for an exception or variance, legal public notice of the City's decision on the application, and written findings of fact that documents the City's determination to grant an exception.

Chapter 3 - Preparation of Stormwater Site Plans

A Stormwater Site Plan is the comprehensive report containing all of the technical information and analysis necessary for the City to evaluate a proposed new development or redevelopment project for compliance with stormwater requirements.

Contents of the Stormwater Site Plan will vary with the type and size of the project and individual site characteristics. The scope of the Stormwater Site Plan also varies depending on the applicability of the Minimum Requirements (see Chapter 2.1).

This chapter describes the contents of a Stormwater Site Plan, provides a general procedure for how to prepare the plan, and provides general guidelines for selecting BMPs. The specific BMPs, design methods and standards to be used are contained in Volumes II-V.

State law requires that engineering work be performed by or under the direction of a professional engineer licensed to practice in Washington State. Plans involving construction of treatment facilities or flow control facilities (detention ponds/tanks/vaults or infiltration basins), structural source control BMPs, or drainage conveyance systems generally involve engineering principles and shall be prepared by or under the direction of a licensed engineer. Construction Stormwater Pollution Prevention Plans (C-SWPPPs) that involve engineering calculations must also be prepared by or under the direction of a licensed engineer.

3.1 Stormwater Site Plan Contents

3.1.1 Standard Stormwater Site Plans

Stormwater Site Plans shall contain the following sections for projects that must comply with Minimum Requirements #1 - #5:

I. Project Description

II. Site Assessment

III. Site Development Plan w/On-Site Stormwater Management

IV. Construction Stormwater Pollution Prevention Plan

V. Source Control Plan

VI. Special Reports and/or Studies

VII. Other Permits

Projects that must also comply with Minimum Requirements #6, #7 and/or #8 shall also include the following section and subsections as applicable:

VIII. Permanent Stormwater Control Plan

A. Off-site Analysis

B. Pre-Developed Hydrology

C. Developed Hydrology

D. Stormwater Flow Control Plan

E. Stormwater Treatment Plan

F. Conveyance Analysis

G. Maintenance and Operation Plan

3.2 Stormwater Site Plan Development: Step-By-Step

The steps involved in developing a Stormwater Site Plan (SSP) are listed below and explained in more detail in the following sections. Underlined items are specific sections of the SSP as listed above:

1. Conduct a Site Assessment
2. Determine if any Special Reports and/or Studies are needed for the site
3. Determine if any Other Permits are required for the site
4. Prepare a Site Development Plan using On-Site Stormwater Management BMPs to the maximum extent feasible
5. Determine threshold discharge areas and applicable requirements for treatment, flow control, and wetlands protection
6. Develop a Permanent Stormwater Control Plan (if applicable)
    A. Conduct an Off-Site Analysis
    B. Determine and document the Pre-Developed Hydrology
    C. Determine and document the Developed Hydrology
    D. Develop a Stormwater Treatment Plan
    E. Develop a Stormwater Flow Control Plan
    F. Review selection of BMPs and Facilities
    G. Conduct a Conveyance Analysis
    H. Develop a Maintenance and Operation Plan for all stormwater controls and facilities
7. Develop a Construction Stormwater Pollution Prevention Plan (C-SWPPP)
8. Develop a Source Control Plan
9. Check compliance with all applicable Minimum Requirements
10. Compile the Stormwater Site Plan

3.2.1 Step 1 – Conduct a Site Assessment

The Site Assessment is an inventory and evaluation of the topography, soils, vegetation, and water features of a site to determine how the site currently processes stormwater. Collecting and analyzing information about the site's features will help develop the most effective Stormwater Site Plan. This information will also be needed to develop Stormwater Flow Control, Stormwater Treatment, and Construction Stormwater Pollution Prevention Plans, should they be required for the site.

Critical Areas on the site (as defined in EMC Title 19.37) shall be inventoried prior to the site planning process. In addition, important site characteristics on adjacent properties shall be assessed to identify how the project will impact or be influenced by the surrounding area.

The Site Assessment shall be included in Section I of the Stormwater Site Plan, and shall consist of two parts: a narrative description and a drawing.

The Site Assessment shall address the following:

- **Topography**: Contour elevations must be determined for the site and shown on the drawing. Topographic features on the site that may act as natural stormwater storage/conveyance shall be identified. Two-foot contours may be obtained from the City's GIS data.

- **Drainage**: Natural drainage patterns consisting of overland flow, swales, and depressions must be identified and clearly marked on the drawing, as well as existing storm drainage to and from the site, the routes of existing flows at all discharge points, and the location of existing outfalls and existing overflow routes. Any on site and adjacent surface waters, critical areas, their buffers, flood plain boundaries, and Shoreline Management boundaries shall also be shown on the drawings.

- **Soils**: Soil types shall be identified and labeled on the drawing. This information may be obtained from the published Natural Resources Conservation Service (NRCS) – formerly the Soil Conservation Service (SCS) – Soil Survey of Snohomish County Area Washington. This document also lists other soil parameters that may be useful to the site design, including permeability, water holding capacity, percent organic matter, and effective soil depth.

  Depths and conditions of the upper soil profile (the A and B horizons) along with the identification of the lower soils shall be given. Particular care shall be taken to locate and identify underlying soils that provide opportunities for storage and infiltration.

- **Ground Cover**: Existing vegetation shall be shown and labeled on the drawing. Such features as tree clusters, grassy areas, and unique or sensitive vegetation should be shown. Unique vegetation may include existing trees above a given diameter. In addition, existing denuded or exposed soil areas should be indicated.

  The locations of existing mature vegetation (trees and shrubs) that retain intact upper soil profiles for stormwater processing shall also be identified.

- **Critical Areas**: Any critical areas and their buffers, as defined in Title 19, Chapter 37 of the Everett Municipal Code, shall be delineated on the drawings. These areas include but are not limited to wetlands, streams, lakes, ponds, seeps, springs, and steep slopes.

- **Adjacent Areas**: The presence of any existing buildings, roads, utilities, and other facilities adjacent to or within the project site shall be determined and their location show on the drawings.

3.2.2 Step 2 – Determine if any Special Studies and/or Reports are needed

Special studies and/or reports that may be needed include, but are not limited to, geotechnical reports, soil testing, and wetland delineations.

Include a copy of these reports in Section VI of the Stormwater Site Plan.

3.2.3 Step 3 – Determine if any Other Permits are required for the site

Refer to Appendix A for permits that may be required by regulatory agencies other than the City. Other permits issued by other regulatory agencies may include drainage-related comments that could affect the development of the site.

Include a list of these permits and comments in Section VII of the Stormwater Site Plan.

3.2.4 Step 4 – Prepare a Site Development Plan

The Site Development Plan shall utilize On-Site Stormwater Management BMPs to the maximum extent feasible (see Volume III, Chapter 12). The Site Assessment process outlined in Chapter 3.2.1 provides the baseline information necessary for adequate site design. Development areas shall be located outside of critical areas and their required buffers and within designated buildable areas to minimize soil and vegetation disturbance and to take advantage of a site's natural ability to store and infiltrate stormwater. The following items from the site assessment shall be used to determine appropriate On-Site Stormwater Management BMPs:

- Location and quantity of off-site drainage entering and on-site drainage leaving the site, if any, and the location
- Slopes throughout the site
- Locations of existing mature vegetation (trees and shrubs) that retain intact upper soil profiles for stormwater processing
- Small depressions on site that retain stormwater runoff
- Depths and conditions of upper soil profile (the A and B horizons) along with the identification of the lower soils.

The following site design strategies shall be considered when Minimum Requirement #5 must be met on a project site:

1. Retaining the duff layer, native topsoil, and natural vegetation in an undisturbed state to the maximum extent practicable.
2. Retaining to the maximum extent practicable the features on the site that provide natural stormwater management.
3. Maintaining predevelopment flow path lengths and natural drainage patterns whenever possible.
4. Keeping distances for overland flow short to promote sheet flow and minimize concentration of runoff
5. Managing stormwater as close to its origin as possible.
6. Directing runoff to areas of permeable soils or natural depression areas to promote infiltration
7. Integrating numerous small, dispersed bioretention areas to capture, store, and infiltrate stormwater on site.
8. Designing roads, parking, lots, and other proposed site features to follow the site's topographic contours in order to minimize cuts and fills and the resulting soil and vegetation disturbance and loss of topsoil or organic duff layer.
9. Limiting the *effective* impervious area of the site.
10. Orienting on-site structures and impervious areas to facilitate sheet flow of stormwater runoff into vegetated open spaces or bioretention areas.
11. Directing rooftop runoff to infiltration areas, bioretention areas, or full dispersion systems to evaporate and transpire stormwater.
12. Minimizing impervious surfaces by reducing building footprints, road length and width, parking areas, and driveways.
13. Utilizing pervious paving surfaces such as porous pavement for roads, driveways, parking lots, or other types of drivable or walkable coverage.

The development layout prepared in this step will be used for determining threshold discharge areas and for calculating whether size thresholds under Minimum Requirements #6, #7, and #8 are exceeded.

3.2.5 Step 5 – Determine the site's threshold discharge areas

The threshold discharge areas on the site must be determined and delineated in order to ascertain applicable requirements for treatment, flow control, and wetlands protection A ***threshold discharge area*** is defined as an on-site area draining to a single natural discharge location or multiple natural discharge locations that

combine within one-quarter mile downstream (as determined by the shortest flow path). The examples in Figure 2.3 in Chapter 2.2 illustrate this definition.

To determine if treatment facilities are necessary (Minimum Requirement #6), the total amount of new plus replaced effective pollution-generating impervious surfaces and pollution-generating pervious surfaces in each threshold discharge area must be determined and compared to the size thresholds in Chapter 2.2.6 (Table 2.1). Note that On-Site Stormwater Management BMPs are always applicable.

To determine if flow control facilities are necessary(Minimum Requirement #7), the total amount of effective impervious surfaces and converted pervious surfaces in each threshold discharge area must be determined and compared to the size thresholds in Chapter 2.2.7 (Table 2.2). Note that On-Site Stormwater Management BMPs are always applicable.

Using the appropriate hydrological analysis (see Chapter 5), also determine the increase in the 100-year recurrence interval flow within each threshold discharge area.

Wetland protection (Minimum Requirement #8) is required if the size thresholds for flow control are met or exceeded for a threshold discharge area and the area discharges to a wetland, either directly or indirectly through a conveyance system.

3.2.6 Step 6 – Develop a Permanent Stormwater Control Plan

Note: if Minimum Requirements #6, #7, and #8 do not apply, jump to Step 7

A. Conduct an Offsite Analysis

An offsite analysis is required for projects that add 5,000 square feet or more of new impervious surface or convert three-quarter acres of pervious surfaces to lawn or landscaped areas, or convert 2.5 acres of forested area to pasture.

The off-site analysis shall contain a description of drainage channels, conveyance systems, and receiving waters to a point one-quarter mile downstream from the project site. It must also review problems that may be caused or aggravated by the project and propose mitigation for those impacts. Aggravated shall mean significantly increasing the frequency of occurrence and/or severity of problem.

The existing or potential issues that may require evaluation include:

1. Conveyance system capacity problems.
2. Localized flooding.
3. Upland erosion impacts, including landslide hazards.
4. Erosion of stream banks or outfalls.
5. Violations of surface water quality standards.

The off-site analysis shall be documented for inclusion in the Stormwater Site Plan

B. Determine and document the Pre-Developed Site Hydrology

A determination of pre-developed site hydrology is required for projects that add 5,000 square feet or more of new impervious surfaces, or that convert ¾ acres of pervious surfaces to lawn or landscaped areas, or convert 2.5 acres of forested area to pasture. A list of assumptions and site parameters used in determining the pre-developed site hydrology shall be provided. The acreage, soil types, and land covers used to determine the pre-developed flow characteristics, along with basin maps, graphics, and exhibits for each subbasin affected by the project shall be included.

For sites that will disturb an acre or more of land, or that are part of a larger common plan of development or sale that will disturb an acre or more of land, the pre-developed condition to be matched shall be a

forested land cover. For other sites, the pre-developed conditions shall be the existing conditions, as defined in the Glossary.

A topographic map of sufficient scale and contour intervals to determine basin boundaries accurately shall be provided in addition to the Site Assessment map. The topographic map shall show the delineation and acreage of all existing drainage basins and areas contributing runoff to the site. Each basin within or flowing through the site shall be named and hydrologic model input parameters referenced.

C. Determine and document the Developed Site Hydrology

This section of the Stormwater Site Plan shall contain narrative, mathematical, and graphic presentations of hydrologic model input parameters selected for the developed site condition, including acreage, soil types, land covers, road layout, and all drainage facilities. Developed basin flows shall be listed and tabulated.

Totals of impervious surfaces, converted pervious surfaces, pollution-generating impervious surfaces, and pollution generating pervious surfaces must be tabulated for each threshold discharge area. Developed basin flows shall be listed and tabulated.

Any documents used to determine the developed site hydrology shall be referenced and/or included. Whenever possible, the same basin name as used for the pre-developed site hydrology shall be maintained. If the boundaries of a basin will be modified by the project, the change shall be clearly shown on a map and the basin name modified to indicate the change.

A proposed topographic map must be provided of sufficient scale and contour intervals to determine basin boundaries accurately. This topographic map shall show:

- Delineation and acreage of all developed drainage basins, threshold discharge areas, and off-site areas contributing runoff to the site, with cross-references to computer printouts or calculation sheets;
- Developed storm drainage to and from the site;
- Routes of future flows at all discharge points;
- Stormwater control facility locations;
- Outfalls;
- Overflow routes;
- Finished floor elevations of buildings; and
- All natural streams and drainage features.

D. Develop a Stormwater Flow Control Plan

Flow control facilities must be provided for discharges from those threshold discharge areas that exceed the size thresholds outlined in Table 2.2. The appropriate hydrological model (see Chapter 5 of this volume) and the design details in Volume III shall be used to size, design, and locate the facilities. Note: On-Site Stormwater Management BMPs shall be applied in all threshold discharge areas in accordance with Minimum Requirement #5.

If the site is suitable for infiltration, an infiltration facility may be used wholly or partly to provide stormwater flow control – see Volume III, Chapter 9 for more information

In the flow control plan, provide a drawing of each flow control facility and its appurtenances. This drawing must show basic measurements necessary to calculate the storage volumes available from zero to the maximum head, all orifice/restrictor sizes and head relationships, control structure/restrictor placement, and location on the site.

Include computer printouts, calculations, equations, references, storage/volume tables, graphs as necessary to show results and methodology used to determine the storage facility volumes. Where the Western Washington Hydrology Model (WWHM) or other approved continuous runoff model is used, its documentation files shall be included.

E. Develop a Stormwater Treatment Plan

The step-by-step process in Chapter 4 of this volume must be used to determine the type of treatment facilities applicable to the project.

Oil control facilities for runoff treatment must be located upstream of treatment and detention facilities and as close to the source of oil-generating activity as possible. Table 3.1 summarizes placement considerations of other treatment facilities in relation to detention.

Table 3.1 Treatment Facility Placement in Relation to Detention.

Water Quality Facility	Preceding Detention	Following Detention
Filter strip (Volume III, Chapter 6)	OK	No—must be installed before flows concentrate.
Basic or large wet pond (Volume III, Chapter 7)	OK	OK—less water level fluctuation in ponds downstream of detention may improve aesthetic qualities and performance.
Basic or large combined detention and wet pond (Volume III,Chapter 7)	Not applicable	Not applicable
Wet vault (Volume III, Chapter 7)	OK	OK
Basic or large sand filter or sand filter vault (Volume III, Chapter 5)	OK with pretreatment	OK—sand filters downstream of detention facilities may require field adjustments if prolonged flows cause sand saturation and interfere with phosphorus removal.
Media Filters	OK	Not OK for some types of media, such as compost
Stormwater treatment wetland/ pond (Volume III, Chapter 7)	OK	OK—less water level fluctuation and better plant diversity are possible if the stormwater wetland is located downstream of the detention facility.

In the Stormwater Treatment Plan, include a drawing of the proposed treatment facilities, and any structural source control BMPs. The drawing must show overall measurements and dimensions, placement on the site, location of inflow, bypass, and discharge systems.

Drainage from non-pollution generating impervious and pervious surfaces does not require treatment. However, if runoff from non-pollution generating surfaces reaches a runoff treatment BMP, flows from those areas must be included in the sizing calculations for the facility. Once runoff from non-pollution generating areas is mixed with runoff from pollution-generating areas, it cannot be separated before treatment.

Runoff from backyards can drain into native vegetation in areas designated as open space or buffers. In these cases, the area in native vegetation may be used to provide the requisite water quality treatment, provided it meets the requirements outlined in Volume III, Chapter 12 for dispersion.

Drainage from areas in native vegetation should not be mixed with untreated runoff from streets and driveways, if possible. It is best to infiltrate or disperse this relatively clean runoff to maximize recharge to shallow groundwater, wetlands, and streams (see Volume III, Chapter 12 for flow dispersion requirements).

The design and location of the treatment BMPs and facilities on the site must be determined using the detailed guidance in Volume III. Sufficient information must be included in the Stormwater Treatment Plan to show that the facilities are designed consistent with the Volume III requirements and design criteria. This information shall include hydrological model printouts, calculations, equations, references, and graphs.

F. Review Selection of BMPs and Facilities

At this time, the list of treatment and flow control facilities BMPs and facilities selected for the site development plan should be reviewed. The site designer may want to re-evaluate the site layout to reduce the need for construction of facilities, or the size of the facilities, by reducing the amount of impervious surfaces and increasing the areas to be left undisturbed. If a new site development plan is developed, then the Stormwater Site Plan development process must go back to Step 2 with the new site development plan.

G. Perform a Conveyance Analysis

A design and analysis of any proposed conveyance systems for the project shall be performed. The results shall be presented in Section VI.G of the Stormwater Site Plan. This information should be presented in a clear, concise manner that can be easily followed, checked, and verified. All pipes, culverts, catch basins, channels, swales, and other stormwater conveyance appurtenances must be clearly labeled and correspond directly to the engineering plans.

H. Prepare an Operation and Maintenance Plan for all Stormwater Control BMPs and Facilities

An Operations and Maintenance (O&M) Plan must be prepared that covers all flow control, treatment, and source control BMPs and facilities. The O&M Plan shall contain a description of each BMP or facility, what it does, and how it works. The O&M Plan must identify and describe the maintenance tasks, and the frequency of each task. The maintenance tasks and frequencies must meet the standards established in this manual. See Appendix F for facility specific maintenance and operation requirements and checklists.

A recommended format for a maintenance activity log that will indicate what actions have been taken shall be included.

The O&M Plan must clearly indicate where it must be kept, and that it must be made available for inspection by the City.

3.2.7 Step 7 – Develop a Construction Stormwater Pollution Prevention Plan

Development of single family lots, duplex lots, and the following new and redevelopment shall provide construction stormwater pollution prevention by submitting a small parcel Construction Stormwater Pollution Prevention Plan to the City as set forth in the City's Design and Construction Standards and Specifications, Section 2:

- Has land disturbing activity of less than 1 acre, and
- Is not part of a larger common plan of development or sale that disturbs an acre or more of land.

New development and redevelopment that does not meet the above criteria must develop a standard Construction Stormwater Pollution Prevention Plan in accordance with Volume II, Chapter 2.

3.2.8 Step 8 – Develop a Source Control Plan

Note: If the project is a residential development, this step may be skipped.

A Source Control Plan must be developed in accordance with Volume IV. Volume IV identifies activities that are potential sources of pollutants in stormwater. If the project involves construction of areas or facilities to conduct any of the activities listed in Chapter 2 of Volume IV, then the activity-specific BMPs in Chapter 3 of Volume IV must be selected, as well as any appropriate operational source control BMPs.

The activity worksheet (see Chapter 2 of Volume IV, Figure 1.1) must be included as part of the Source Control Plan in Section V of the Stormwater Site Plan.

The project may have additional source control responsibilities as a result of area-specific pollution control plans (e.g., watershed or basin plans, water clean-up plans, groundwater management plans, lakes management plans), ordinances, and regulations.

The design and location of the BMPs and facilities on the site must be determined using the detailed guidance in Volume IV.

3.2.9 Step 9 – Develop a Project Description

A Project Description shall be developed that describes the nature and purpose of the construction project. The total size of the area shall be included, as well as any increase in existing impervious area; the total area expected to be disturbed by clearing, grading, excavation or other construction activities, including offsite borrow and fill areas; and the volumes of grading cut and fill that are proposed.

3.2.10 Step 10 – Compile the Stormwater Site Plan

In completing Steps 1 – 9, the required sections of a Stormwater Site Plan will have been developed. Assemble these elements in the order given in Chapter 3.1 of this volume.

Chapter 4 - Runoff Treatment Facility Selection Process

The following step-by-step process must be used to determine the type of treatment facilities applicable to a project. This process must be used when developing the Stormwater Treatment Plan portion of the Stormwater Site Plan (refer to Chapter 3.2.6).

Please refer to Figure 4.1 (next page) for an illustration of the treatment facility selection process. When selecting BMPs, select an option from the menu after reviewing the applicability, limitations, and design criteria of each BMP with respect to site suitability and compatibility.

4.1 Step 1: Determine the pollutants of concern

In the off-site analysis, the project's natural receiving water(s) were identified. Pollutants of concern may have already been identified for some receiving waters by the City, Ecology, or EPA. The following factors must be considered when determining the appropriateness of a treatment facility for a particular project site:

- Whether the receiving water is reported under Section 305(b) of the Clean Water Act (CWA), and designated as not supporting beneficial uses;
- Whether the receiving water is listed under Sections 304(1)(1)(A)(I), 304(1)(1)(A)(II), or 304(1)(1)(B)(1) of the CWA;
- Whether the receiving water is listed in Washington State's Non-point Source Assessment required by Section 319(a) of the CWA;
- Whether any type of water quality management plans and/or local ordinances or regulations have established specific requirements for that (those) receiving water(s).

Note: the City may be contacted for a list of special basin requirements that may apply to a project depending upon its location.

An analysis of the proposed land use(s) of the project shall also be used to determine the stormwater pollutants of concern. This analysis will help determine whether "basic," "enhanced," or "phosphorus" treatment requirements apply to the project. These decisions are made in the steps below.

4.2 Step 2: Determine whether the facility will be City-owned or privately owned

The City of Everett assumes ownership and maintenance of facilities designed and constructed for single-family residential projects. However, all other facilities (for multi-family, commercial or industrial projects) remain privately owned and operated.

The City of Everett will not generally accept ownership of some types of water quality BMPs without prior approval by the City. As outlined in Figure 4.1, BMPs that require prior approval include:

- Sand Filter Vaults or Devices
- Media Filtration devices.

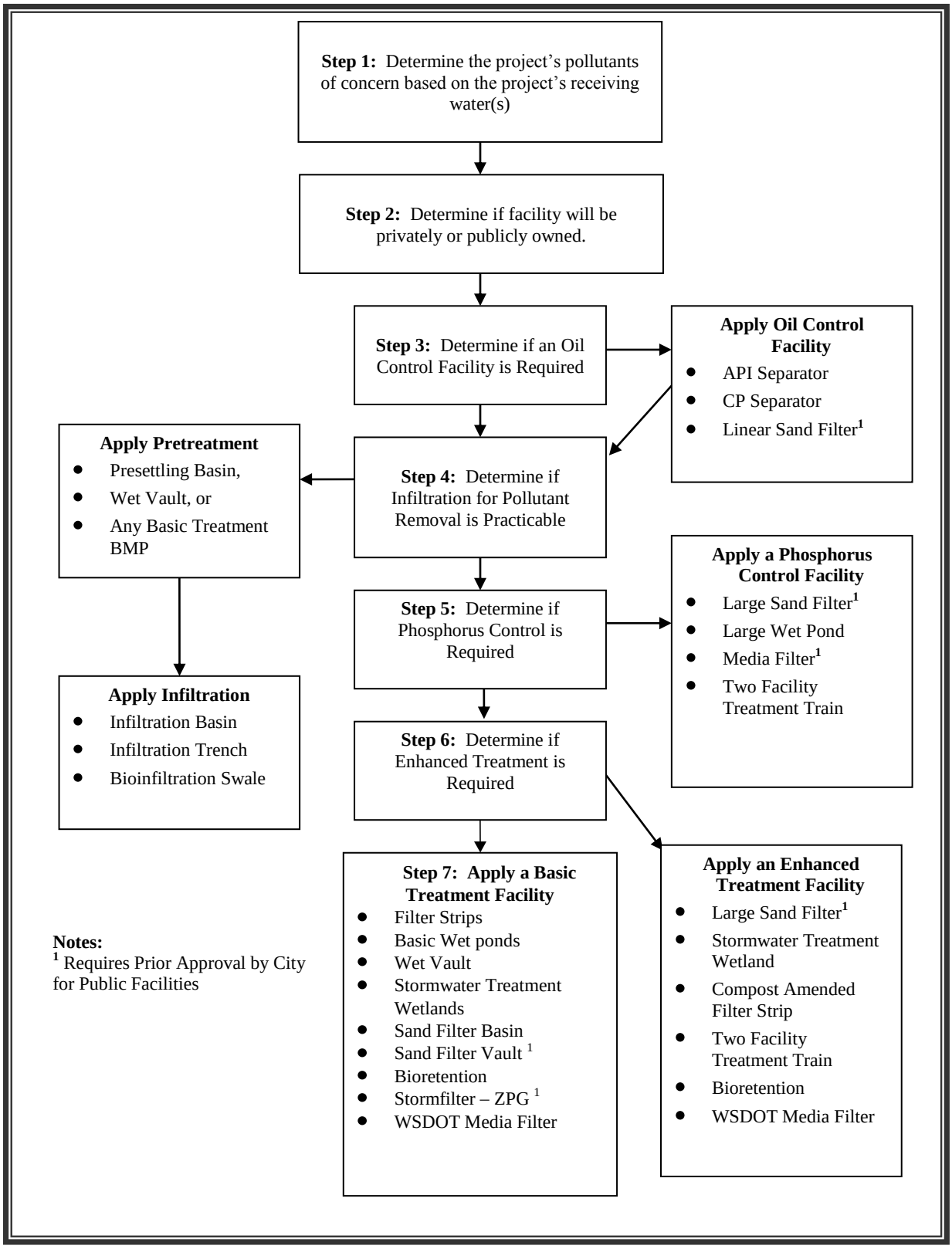

Figure 4.1 Treatment Facility Selection Flow Chart

4.3 Step 3: Determine whether an Oil Control facility/device is required

The use of oil control devices and facilities is dependent upon the specific land use proposed for development.

The following oil control menu applies to projects that have "high-use sites" or have National Pollutant Discharge Elimination System (NPDES) permits that require application of oil control. High-use sites are those that typically generate high concentrations of oil due to high traffic turnover or the frequent transfer of oil. High-use sites include:

- An area of a commercial or industrial site subject to an expected design year average daily traffic count equal to or greater than 100 vehicles per 1,000 square feet of gross building area
- An area of a commercial or industrial site subject to petroleum storage and transfer in excess of 1,500 gallons per year, not including routinely delivered heating oil
- An area of a commercial or industrial site subject to parking, storage or maintenance of 25 or more vehicles that are over 10 tons gross weight (trucks, buses, trains, heavy equipment, etc.)
- A road intersection with an ADT count of 25,000 vehicles or more on the main roadway and 15,000 vehicles or more on the intersecting roadway, excluding projects proposing primarily pedestrian or bicycle use improvements.

The City may also require oil control facilities from this menu to be used on other sites that generate high concentrations of oil.

Please refer to Table 4.1 for a listing of oil control facility options. Then see Chapter 8 of Volume III for guidance on the proper selection of options and design details.

Note: Where this menu is applicable, it is in addition to facilities required by one of the other treatment menus.

If an Oil Control Facility is required, select and apply an Oil Control Facility according to the following oil control menu (Table 4.1). Select an option from the menu after reviewing the applicability and limitations, site suitability, and design criteria of each option for compatibility with the site.

Table 4.1 Oil Treatment Menu

Treatment Option	Notes
API-Type Oil/Water Separator	See Chapter 8 of Volume III
Coalescing Plate Oil/Water Separator	See Chapter 8 of Volume III
Linear Sand Filter	An oil treatment Linear Sand Filter may not fulfill other treatment requirements as well.
DOE approved technology for oil treatment	GULD or equivalent designation

4.4 Step 4: Determine whether infiltration for pollutant removal is practicable

Infiltration can be effective at treating stormwater runoff, but soil properties must be appropriate to achieve effective treatment while not adversely impacting groundwater resources – see the soil suitability criteria

below. The location and depth to bedrock, the water table, or impermeable layers (such as glacial till), and the proximity to wells, foundations, septic tank drainfields, and unstable slopes can also preclude the use of infiltration.

Infiltration treatment (i.e., an infiltration basin or trench) meets the requirements for *basic*, *phosphorus*, and *enhanced* treatment if the treatment infiltration volume is successfully infiltrated within a maximum time period of 48 hours. The infiltration treatment volume can be either:

1. the volume of developed runoff resulting from the 6 month, 24-hour storm volume, or
2. the 91st percentile, 24-hour runoff volume as indicated by an approved continuous model (see Chapter 5 for more information).

The drawdown time can be calculated using a horizontal projection of the infiltration basin mid-depth dimensions and the estimated long-term infiltration rate.

Pretreatment is required upstream of infiltration treatment facilities. When soil suitability criteria for treatment are met, presettling of sediment is all that is required. See Volume III, Chapter 4 for presettling BMPs.

Soil Suitability Criteria #1 and #2 below apply for infiltration treatment facilities. If the soil criteria for treatment are not met, then infiltration for flow control may still be possible in accordance with Volume III, Chapter 9; however, the infiltration facility must be preceded by stormwater treatment facilities selected in accordance with Steps 5 - 7 below.

Soil Suitability Criteria #1:

The short-term soil infiltration rate must be 2.4 inches per hour, or less, to a depth of 2.5 times the maximum design pond water depth, or a minimum of 6 feet below the base of the infiltration facility. Long-term design infiltration rates up to 2.0 inches/hour can be used, with approval by the City, if the treatment soil has characteristics comparable to those specified in Soil Suitability Criteria #2 (summarized below) to adequately control the target pollutants.

Soil Suitability Criteria #2:

The soil shall have a cation exchange capacity (CEC) greater than or equal to 5 milliequivalents per 100 milligrams of dry soil and an organic content of at least 1 percent (using ASTM D-2974) to a minimum depth of 18 inches (measured from the bottom of the facility).

If infiltration is practicable for treatment, select an infiltration facility to complete the runoff treatment facility selection process – see Chapter 9 of Volume III for infiltration facilities.

If infiltration for treatment is not practicable, proceed to Step 5.

4.5 Step 5: Determine whether Phosphorus Control is required

At the time this volume was developed, there were no established phosphorus control requirements by Ecology or USEPA in the City of Everett.

If phosphorus control is required in the future, a phosphorous treatment facility must be selected and applied. Please refer to the phosphorus treatment menu in Table 4.2.

Note: Project sites subject to the phosphorus treatment requirement could also be subject to the enhanced treatment requirement (see Step 6). In that event, a facility or a treatment train that is listed in both the enhanced treatment menu and the phosphorus treatment menu shall be selected.

Table 4.2 Phosphorus Treatment Menu

Treatment Option	Notes
Infiltration with appropriate pretreatment	Soil suitability criteria for treatment must be met – see Step 4.
Large Sand Filter	See Volume III, Chapter 5
Large Wetpond	See Volume III, Chapter 7
Media Filter Drain (previously called an Ecology Embankment)	See WSDOT *Highway Runoff Manual*:, BMP RT-07
DOE approved technology for phosphorus treatment	GULD or equivalent designation
Two Facility Treatment Trains • Filter Strip – Linear Sand Filter* • Linear Sand Filter* – Filter Strip • Basic Wet Pond – Sand Filter (basin or vault) • Wet Vault – Sand Filter (basin or vault) • Stormwater Treatment Wetland – Sand Filter (basin or vault) • Wet Detention Pond – Sand Filter (basin or vault)	*If a Linear Sand Filter is being used to meet oil control requirements, the same filter shall not also be counted as part of a two facility treatment train.

4.6 Step 6: Determine whether Enhanced Treatment is required

Enhanced treatment for reduction in dissolved metals is required for the following types of projects that will disturb an acre or more of land, or that are part of a larger common plan of development or sale that will disturb an acre or more of land, *and* that discharge to fish-bearing streams, lakes, or to waters or conveyance systems tributary to fish-bearing streams or lakes:

- Industrial project sites
- Commercial project sites
- Multifamily project sites with 200 units or greater
- Arterial roads

Note: Landscaped areas of industrial, commercial, and multifamily project sites are subject only to basic treatment requirements, as are parking lots of industrial and commercial project sites that are dedicated solely to parking of employees' private vehicles and that do not involve any other pollution-generating sources (e.g., industrial activities, customer parking, storage of erodible or leachable material, wastes or chemicals).

Sites listed above that discharge directly or indirectly (through a municipal storm sewer system) to the following basic treatment receiving waters are also not subject to enhanced treatment requirements:

1. Port Gardner Bay (the Puget Sound)
2. Snohomish River and estuary

For developments with a mix of land use types, the enhanced treatment requirement shall apply when the runoff from the areas subject to the enhanced treatment requirement comprises 50 percent or more of the total runoff within a threshold discharge area.

If the project must apply enhanced treatment, select and apply an appropriate enhanced treatment facility according to Table 4.3 below. Select an option from the menu after reviewing the applicability and limitations, site suitability, and design criteria of each for compatibility with the site.

Table 4.3 Enhanced Treatment Menu

Treatment Option	Notes
Infiltration with appropriate pretreatment	Soil suitability criteria for treatment must be met – see Step 4.
Large Sand Filter	See Volume III, Chapter 5
Compost Amended Filter	See Volume III, Chapter 6
Stormwater Treatment Wetland	See Volume III, Chapter 7
Media Filter Drain (previously called an Ecology Embankment)	See WSDOT *Highway Runoff Manual*:, BMP RT-07
Bioretention	See Volume III, Chapter 10
DOE approved technology for enhanced treatment	GULD or equivalent designation
Two Facility Treatment Trains • Filter Strip – *Linear Sand Filter • *Linear Sand Filter – Filter Strip • Sand Filter (basin or vault) – Media Filter (• Basic Wet Pond – Sand Filter (basin or vault) or Media Filter • Wet Vault – Sand Filter (basin or vault) or Media Filer • Wet Detention Pond – Sand Filter (basin or vault) or Media Filter	*If a Linear Sand Filter is being used to meet oil control requirements, the same filter shall not also be counted as part of a two facility treatment train. If a Sand Filter (basic, vault or linear) is the first component of the treatment train, presettling is required upstream of the Sand Filter, unless the Sand Filter is preceded by a detention system. The media in Media Filters must be approved by DOE for enhanced treatment

4.7 Step 7: Select a Basic Treatment Facility

The basic treatment menu is generally applied to:

- Project sites that discharge to ground water, UNLESS the project uses infiltration strictly for flow control – not treatment – and the discharge is within one-quarter mile of a phosphorus sensitive lake (use the phosphorus treatment menu), or within one-quarter mile of a fish-bearing stream or a non-phosphorus sensitive lake (use the enhanced treatment menu).
- Residential projects not otherwise needing phosphorus control in Step 5.
- Project sites discharging directly or indirectly to basic treatment receiving waters.
- Project sites that drain to streams that are not fish-bearing, or to waters not tributary to fish-bearing streams.
- Landscaped areas of industrial, commercial, and multifamily project sites.
- Parking lots of industrial and commercial project sites dedicated solely to parking of employees' private vehicles that do not involve any other pollution-generating sources (e.g., industrial activities, customer parking, storage of erodible or leachable material, wastes or chemicals).

For developments with a mix of land use types, the basic treatment requirement shall apply when the runoff from the areas subject to the basic treatment requirement comprises 50 percent or more of the total runoff within a threshold discharge area.

Please refer to the following basic treatment menu. Select an option from the menu after reviewing the applicability and limitations, site suitability, and design criteria of each for compatibility with the site.

Table 4.4 Basic Treatment Menu

Treatment Option	Notes
Infiltration with appropriate pretreatment	Soils must meet soil suitability criteria for treatment – see Step 4.
Basic Sand Filter	See Volume III, Chapter 5
Filter Strips (basic or narrow)	See Volume III, Chapter 6
Wet Pond (basic or large)	See Volume III, Chapter 7
Stormwater Treatment Wetland	See Volume III, Chapter 7
Media Filter Drain (previously called an Ecology Embankment)	See WSDOT *Highway Runoff Manual*:, BMP RT-07
Bioretention	See Volume III, Chapter 10
DOE approved technology for basic treatment	GULD or equivalent designation

Chapter 5 - Hydrologic Analysis and Design Standards

The purpose of this chapter is to define the minimum computational standards required for the design of storwmater management facilities in the City, to outline how these may be applied, and to reference where more complete details and information may be found.

5.1 Minimum Computational Standards

The minimum computational standards depend on the type of information required and the size of the drainage area to be analyzed.

For sites that disturb an acre or more of land, or that are part of larger common plan of development or sale that disturbs an acre of more of land, a calibrated continuous simulation hydrologic model based on the U.S. Environmental Protection Agency's (U.S. EPA) Hydrological Simulation Program-Fortran (HSPF) program, or an approved equivalent model (e.g., the Western Washington Hydrology Model [WWHM] or MGSFlood), must be used to calculate runoff and determine design flow rates and volumes for the purpose of designing flow control BMPs in the City. Runoff treatment BMPS may be sized using the Soil Conservation Service Unit Hydrograph (SCSUH) or Santa Barbara Unit Hydrograph (SBUH) methodology, with the level pool routing method.

For project sites in the City that will disturb less than an acre of land, and that are not part of a larger common plan of development or sale that will disturb an acre or more of land, flow control and runoff treatment BMPS may be sized using the Soil Conservation Service Unit Hydrograph (SCSUH) or Santa Barbara Unit Hydrograph (SBUH) methodology, with the level pool routing method.

For the purpose of designing conveyance systems in the City, the method depends upon the size of the basin. For sites in the City with a developed time of concentration less than or equal to 60 minutes, the rational method must be used to determine design flows. For sites in the City with a developed time of concentration of greater than 60 minutes, the designer must use an approved continuous simulation runoff model. Conveyance design is discussed in detail in Chapter 6 of this volume.

Table 5.1 Application of Hydrologic Design Methodologies

Summary of the Application of Design Methodologies			
	Stormwater System Designs in the City of Everett		
Method	**Conveyance**	**Treatment**	**Flow Control**
Continuous Runoff Model: (WWHM or an approved alternative)	Applies to large sites (time of concentration greater than or 60 minutes	Applies to all treatment BMPs	Applies to all flow control BMPs
Rational Method	Applies to most sites (time of concentration less than or equal to 60 minutes)	Not Applicable	Not Applicable
Soil Conservation Service Unit Hydrograph (SCSUH)/Santa Barbara Unit Hydrograph (SBUH)	***Not Applicable in the City***	***Allowed for sites below the NPDES threshold****	***Allowed for sites below the NPDES threshold****

*Sites disturbing less than an acre of land that are not part of a larger common plan of development or sale that disturbs an acre or more of land.

5.2 Western Washington Hydrology Model

Ecology has developed the HSPF-based WWHM, which has been created for the specific purpose of sizing stormwater control facilities for new developments and redevelopments in western Washington. The WWHM can be used for a range of conditions and developments; however, certain limitations are inherent in this software.

The latest version of the DOE Stormwater Management Manual for Western Washington can be consulted for a summarization of the assumptions made in creating the Western Washington Hydrology Model (WWHM) and a discussion of limitations of the model.

More information on the WWHM, as well as the WWHM software and a User's Manual can be found on Ecology's website at:

<http://www.ecy.wa.gov/programs/wq/stormwater/wwhm_training/index.html>.

One other HSPF-based continuous runoff model that has been approved by Ecology and may be used in the City is MGSFlood, which was developed by the Washington State Department of Transportation. This public domain software is available at:

http://www.mgsengr.com/mgsfloodinfo.htm

Use of other continuous simulation runoff models must receive prior concurrence from the City before being used for facility design.

5.3 Rational Method

The formula for the rational method is as follows:

$$Q = C\,i\,A$$

where:

Q = runoff in cubic feet per second

C = runoff coefficient (unitless)

i = average rainfall intensity, in inches per hour, for a particular storm duration

A = drainage area in acres

The rainfall intensity is found using the following equation, with contributing basin's time of concentration used as the storm duration:

$$i = m/T^n$$

where

T = time of concentration

m,n = dimensionless coefficients (see Table 5.2)

Table 5.2 Rainfall Coefficients

coefficient	Mean Recurrence Interval (MRI)					
	2 yr	5 yr	10 yr	25 yr	50 yr	100 yr
m	3.69	5.20	6.31	7.83	8.96	10.07
n	0.556	0.570	0.575	0.582	0.585	0.586

The runoff coefficient represents the portion of rainfall that becomes runoff. Table 5.3 gives runoff coefficient values to be used for storm conveyance calculations in the City of Everett.

Table 5.3 Runoff Coefficients for Use with the Rational Method

GENERAL LAND COVER			
LAND COVER	C	LAND COVER	C
Dense Forest	0.10	Playgrounds	0.30
Light Forest	0.15	Gravel Areas	0.80
Pasture	0.20	Pavement and Roofs	0.90
Lawns	0.25	Open Water	1.00
SINGLE FAMILY RESIDENTIAL AREAS (Density is in dwelling units per gross acre)			
DENSITY	C	DENSITY	C
0.20	0.17	3.00	0.42
0.40	0.20	3.50	0.45
0.80	0.27	4.00	0.48
1.00	0.30	4.50	0.51
1.50	0.33	5.00	0.54
2.00	0.36	5.50	0.57
2.50	0.39	6.00	0.60

5.4 Single Event Hydrograph Method

Two examples of single-event hydrograph methodology are the Soil Conservation Service Unit Hydrograph (SCSUH) and the Santa Barbara Unit Hydrograph (SBUH).

In the following sections, the key elements of hydrograph analysis are presented, including the design storm hyetograph, runoff parameters, and hydrograph synthesis, routing, summation and phasing.

5.4.1 Design Storm Hyetograph

All storm event hydrograph methods require the input of a design storm hyetograph, which is a plot of rainfall depth versus time for a given design storm frequency and duration. The design storm hyetograph is constructed by multiplying a dimensionless hyetograph (which plots the percent of total rainfall depth versus time) by the total rainfall depth for the design storm. The design storm hyetograph to be used in the City of Everett is a SCS Type 1A rainfall distribution resolved to 10-minute time intervals.

Table 5.4 gives the total precipitation for the 6 month, 2-year, 10-year, and 100-year, 24-hour duration storms in Everett:

Table 5.4 Design Storm Hyetograph 24-hour Design Storm Totals

Return Frequency	Total Precipitation (inches)
6 month	1.12
2 year	1.55
10 year	2.25
25 year	2.60
100 year	3.25

5.4.2 Runoff Parameters

All storm event hydrograph methods require input of parameters which describe physical drainage basin characteristics. These parameters provide the basis for development of the runoff hydrograph. This section describes the three key parameters (area, curve number, and time of concentration) used in hydrograph synthesis.

Area

Homogenous basin areas must be selected to obtain accuracy in hydrograph analysis. Significant differences in land use within a given drainage basin must be addressed by dividing the basin into subbasin areas of similar land use and/or runoff characteristics. Hydrographs are then computed for each subbasin area and summed to form the total runoff hydrograph for the basin.

For accuracy, all pervious and impervious areas within a given basin or subbasin must be analyzed separately. This analysis may be done by either 1) computing separate hydrographs for each area and combining them to form the total runoff hydrograph, or 2) by computing the precipitation excess for each area and combining the excesses to obtain the total precipitation excess, which is then used to develop the runoff hydrograph. This procedure is explained further later in this section.

Curve Number

The Soil Conservation Service (SCS) classified over 4,000 soil types into four soil groups. These are:

A. Low runoff potential. Soils having high infiltration rates, even when thoroughly wetted, and consisting chiefly of deep, well-to-excessively drained sands or gravels. These soils have a high rate of water transmission.

B. Moderately low runoff potential. Soils having moderate infiltration rates when thoroughly wetted, and consisting chiefly of moderately fine to moderately coarse textures. These soils have a moderate rate of water transmission.

C. Moderately high runoff potential. Soils having slow infiltration rates when thoroughly wetted, and consisting chiefly of soils with a layer that impedes downward movement of water or soils with moderately fine to fine textures. These soils have a slow rate of water transmission.

D. High runoff potential. Soils having very slow infiltration rates when thoroughly wetted and consisting chiefly of clay soils with a high swelling potential, soils with a permanent high water table, soils with a hardpan or clay layer at or near the surface, and shallow soils over nearly impervious material. These soils have a very slow rate of water transmission.

The following table shows the hydrologic group of soils present in the Everett area:

Table 5.5 Hydrologic Groups (HG) for Soils in the City of Everett

Soil Type	HG	Soil Type	HG
Alderwood	C	Mukilteo	D
Bellingham	C	Norma	D
Cathcart	C	Pastik	C
Custer	C	Puget	C
Everett	A	Puyallup	B
Indianola	A	Snohomish	D
Kitsap	C	Sumus	C
Lynnwood	A	Tokul	C
McKenna	D	Winston	A

The Soil Conservation Service (SCS) also developed “curve number” (CN) values based on soil type and land use. Table 5.6 shows the CN values, by land use description, for the four hydrologic soil groups. These numbers are for a 24-hour duration storm and typical antecedent soil moisture conditions preceding 24-hour storms in western Washington.

The following are important criteria/considerations for selection of CN values:

1. Separate CN values must be selected for the pervious and impervious areas of an urban basin or subbasin.

   For single family residential areas, the percent impervious given in Table 5.6 may be used to compute the respective pervious and impervious areas. For other development (commercial, multi-family), the percent impervious must be computed from the site plan.

2. The pervious area CN value is generally a weighted average of all the pervious area CNs within the subbasin. CN values can be area-weighted when they apply to pervious areas of similar CNs (within 20 CN points). Where pervious areas have high and low CNs, separate hydrographs should be generated and summed to form one hydrograph, unless the low CN areas are less than 15 percent of the subbasin.

Table 5.6 Runoff Curve Numbers

Runoff Curve Numbers for Selected Agricultural, Suburban, and Urban Areas

(DOE 2005 Stormwater Management Manual for Western Washington)

Cover type and hydrologic condition.	CNs for hydrologic soil group A	B	C	D
Curve Numbers for Pre-Development Conditions				
Pasture, grassland, or range-continuous forage for grazing:				
Fair condition (ground cover 50% to 75% and not heavily grazed).	49	69	79	84
Good condition (ground cover >75% and lightly or only occasionally grazed)	39	61	74	80
Woods:				
Fair (Woods are grazed but not burned, and some forest litter covers the soil).	36	60	73	79
Good (Woods are protected from grazing, and litter and brush adequately cover the soil).	30	55	70	77
Curve Numbers for Post-Development Conditions				
Open space (lawns, parks, golf courses, cemeteries, landscaping, etc.)[1]				
Fair condition (grass cover on 50% - 75% of the area).	77	85	90	92
Good condition (grass cover on >75% of the area)	68	80	86	90
Impervious areas:				
Open water bodies: lakes, wetlands, ponds etc.	100	100	100	100
Paved parking lots, roofs[2], driveways, etc. (excluding right-of-way)	98	98	98	98
Permeable Pavement				
Landscaped area	77	85	90	92
50% landscaped area/50% impervious	87	91	94	96
100% impervious area	98	98	98	98
Paved	98	98	98	98
Gravel (including right-of-way)	76	85	89	91
Dirt (including right-of-way)	72	82	87	89
Pasture, grassland, or range-continuous forage for grazing:				
Poor condition (ground cover <50% or heavily grazed with no mulch).	68	79	86	89
Fair condition (ground cover 50% to 75% and not heavily grazed).	49	69	79	84
Good condition (ground cover >75% and lightly or only occasionally grazed)	39	61	74	80
Woods:				
Poor (Forest litter, small trees, and brush are destroyed by heavy grazing or regular burning).	45	66	77	83
Fair (Woods are grazed but not burned, and some forest litter covers the soil).	36	60	73	79
Good (Woods are protected from grazing, and litter and brush adequately cover the soil).	30	55	70	77

Single family residential[3]**:** Dwelling Unit/Gross Acre	Should only be used for subdivisions > 50 acres	Average Percent impervious area[3,4]	
1.0 DU/GA		15	Separate curve number shall be selected for pervious & impervious portions of the site or basin
1.5 DU/GA		20	
2.0 DU/GA		25	
2.5 DU/GA		30	
3.0 DU/GA		34	
3.5 DU/GA		38	
4.0 DU/GA		42	
4.5 DU/GA		46	
5.0 DU/GA		48	
5.5 DU/GA		50	
6.0 DU/GA		52	
6.5 DU/GA		54	
7.0 DU/GA		56	
7.5 DU/GA		58	
PUD's, condos, apartments, commercial businesses, industrial areas & & subdivisions < 50 acres	%impervious must be computed	Separate curve numbers shall be selected for pervious and impervious portions of the site	

For a more detailed and complete description of land use curve numbers refer to chapter two (2) of the Soil Conservation Service's Technical Release No. 55 , (210-VI-TR-55, Second Ed., June 1986).

SCS Curve Number Equations

The rainfall-runoff equations of the SCS method relate a land area's runoff depth (precipitation excess) to the precipitation it receives and to its natural storage capacity as follows:

$$Q_d = (P_R - 0.2S)^2/(P_R + 0.8S) \quad \text{for } P_R \geq 0.2S$$

$$= 0 \quad \text{for } P_R < 0.2S$$

where:

Q_d = runoff depth in inches over the area,

P_R = precipitation depth in inches over the area, and

S = potential maximum natural detention, in inches over the area, due to infiltration, storage, etc.

The area's potential maximum detention, S, is related to its curve number, CN:

$$S = (1000/CN) - 10$$

The combination of the above equations allows for estimation of the total runoff volume by computing total runoff depth, Q_d, given the total precipitation depth, P_R.

When developing the runoff hydrograph, the above equation for Q_d is used to compute the incremental runoff depth, for each time interval, from the incremental precipitation depth given by the design storm hyetograph. This time distribution of runoff depth is often referred to as the precipitation excess and provides the basis for synthesizing the runoff hydrograph.

Time of Concentration and Travel Time

The following discussion is based on the methods described in Chapter 3, SCS TR-55(5). The time of concentration (T_c) is the time it takes for runoff to travel from the hydraulically most distant point of the watershed to the watershed outlet. The T_c is computed by summing all the travel times for consecutive components of the drainage conveyance system. The T_c influences the shape and peak of the runoff hydrograph. Urbanization usually decreases the T_c, which increases peak discharge.

Water moves through a watershed as sheet flow, shallow concentrated flow, open channel flow, or some combination of these types of flow. The type of flow that occurs is best determined by field inspection.

Travel time (T_t) is the ratio of flow length to flow velocity:

$$T_t = L/(60V)$$

where:

T_t = travel time (minutes)

L = flow length (feet)

V = average velocity (feet/sec)

60 = conversion factor from seconds to minutes

The T_c is the sum of T_t values for the various consecutive flow segments.

$$T_c = T_{t1} + T_{t2} + \ldots T_{tm}$$

where:

T_c = time of concentration (minutes) and

m = number of flow segments

Sheet Flow: Sheet flow is flow over plane surfaces. It usually occurs in the headwater areas of streams. With sheet flow, the friction value n_s is used. The n_s values are for very shallow flow depths of about 0.1 foot and are only used for travel lengths up to 300 feet. Table 5.7 gives Manning's n_s values for sheet flow for various surface conditions.

Manning's kinematic solution is used to directly compute T_t:

$$T_t = 0.42(n_s L)^{0.8}/((P_2)^{0.527}(S_o)^{0.4})$$

where:

T_t = travel time (min),

n_s = sheet flow Manning's effective roughness coefficient

L = flow length (ft),

P_2 = 2-year, 24-hour rainfall (in), and

S_o = slope of hydraulic grade line (land slope, ft/ft)

Shallow Concentrated Flow: After a maximum of 300 feet, sheet flow is assumed to become shallow concentrated flow. The average velocity for this flow can be calculated using the k_S values from in which average velocity is a function of watercourse slope and type of channel. After computing the average velocity using the velocity equation below, the travel time (T_t) for the shallow concentrated flow segment can be computed using the travel time equation described above.

Velocity Equation: The following equation is commonly used for computing average flow velocity, once it has measurable depth:

$$V = k(s_o)^{1/2}$$

where:

V = velocity (ft/s)

k = time of concentration velocity factor (ft/s)

s_o = slope of flow path (ft/ft)

"k" is computed for various land covers and channel characteristics with assumptions made for hydraulic radius using the following rearrangement of Manning's equation:

$$k = (1.49(R)^{0.667})/n$$

where:

R = an assumed hydraulic radius

n = Manning's roughness coefficient for open channel flow

Table 5.7 "n" and "k" Values Used in Time Calculations for Hydrographs

Sheet Flow (initial 300 feet of travel) Surface	 n
Smooth surfaces (concrete, asphalt, gravel, compacted soil)	0.011
Fallow fields or loose soil	0.05
Short prairie grass and lawns	0.17
Dense grasses	0.15
Bermuda grass	0.24
Range (natural)	0.41
Woods or forest with light underbrush	0.13
Woods or forest with dense underbrush	0.40
Shallow Concentrated Flow (After the initial 300 feet of sheet flow; R = 0.1) Surface	 k
Forest with heavy ground litter and meadows (n = 0.10)	3
Brushy ground with some trees (n = 0.060)	5
Fallow or minimum tillage cultivation (n = 0.040)	8
High grass (n = 0.035)	9
Short grass, pasture and lawns (n = 0.030)	11
Nearly bare ground (n = 0.25)	13
Paved and gravel areas (n = 0.012)	27
Intermittent Channel Flow (At the beginning of visible channels, R = 0.2) Channel Type	 k
Forested swale with heavy ground litter (n = 0.10)	5
Forested drainage course/ravine with defined channel bed (n = 0.050)	10
Rock-lined waterway (n = 0.035)	15
Grassed waterway (n = 0.030)	17
Earth-lined waterway (n = 0.025)	20
CMP pipe (n = 0.024)	21
Concrete pipe (n = 0.012)	42
Other waterways and pipe	0.508/n
Continuous Stream Channel Flow (R = 0.4) Channel Type	 k
Meandering stream with some pools (n = 0.040)	20
Rock-lined stream (n = 0.035)	23
Grass-lined stream (n = 0.030)	27
Other streams, man-made channels, and pipe	0.807/n

Open Channel Flow: Open channels are assumed to begin where surveyed cross-sectional information has been obtained, where channels are visible on aerial photographs or in the field, or where lines indicating streams appear (in blue) on United States Geological Survey (USGS) quadrangle sheets. The k_c values from used in the velocity equation above or water surface profile information can be used to estimate average flow velocity. Average flow velocity is usually determined for bank full conditions. After average velocity is computed, the travel time (T_t) for the channel segment can be computed using the travel time equation above.

Lakes or Wetlands: Sometimes it is necessary to estimate the velocity of flow through a lake or wetland at the outlet of a watershed. This travel time is normally very small and can be assumed to be zero. Where significant attenuation may occur due to storage effects, the flows should be routed using the "level pool routing" technique described in Chapter 5.4.4.

Limitations: The following limitations apply in estimating travel time (T_t).

1. Manning's kinematic solution should not be used for sheet flow longer than 300 feet.
2. In watersheds with storm drains, the appropriate hydraulic flow path must be carefully identified to estimate T_c. Storm sewers generally handle only a small portion of a large event. The rest of the peak flow travels to the outlet by streets, lawns, etc.
3. A culvert or bridge can act as a reservoir outlet if there is significant storage behind it. A hydrograph should be developed to this point and the "level pool routing" technique described in Chapter 5.4.4 should be used to determine the outflow rating curve through the culvert or bridge.

5.4.3 Hydrograph Synthesis

This subsection presents a description of the Santa Barbara Urban Hydrograph (SBUH) method, which is one of the many SCS-based hydrograph methods available for use. However, this particular method may be more consistent and better suited for analysis of small urban basins than other methods.

The Santa Barbara Urban Hydrograph Method

The SBUH method uses two steps to synthesize the runoff hydrograph: 1) computing the instantaneous hydrograph, and 2) computing the runoff hydrograph.

The instantaneous hydrograph, I(t), in cfs, at each time step, δt, is computed as follows:

$$I(t) = 60.5\ R(t)\ A/\delta t$$

where:

$R(t)$ = total runoff depth (both impervious and pervious runoffs) at time increment δt, in inches (also known as precipitation excess)

A = area in acres

δt = time interval in minutes (10 minutes maximum for all design storms of 24-hour duration)

The runoff hydrograph, Q(t), is obtained by routing the instantaneous hydrograph I(t), through an imaginary reservoir with a time delay equal to the time of concentration, T_c, of the drainage basin. The following equation estimates the routed flow, Q(t):

$$Q(t+1) = Q(t) + w[I(t) + I(t+1) - 2Q(t)]$$

where:

$$w = \delta t/(2T_c + \delta t)$$

δt = time interval in minutes

5.4.4 Hydrograph Routing

This section presents the methodology for routing a hydrograph through an existing retention/detention facility or closed depression, and for sizing a new retention/detention facility using hydrograph analysis.

Storage Routing Technique (level pool routing)

The "level pool routing" technique is one of the simplest and most commonly used hydrograph routing methods. This method is based on the continuity equation:

Inflow - Outflow = Change in storage

or:

$$\frac{(I_1 + I_2)}{2} - \frac{(O_1 + O_2)}{2} = \delta S = \frac{(S_2 - S_1)}{\delta t}$$

where:

I = Inflow at time 1 and time 2

O = Outflow at time 1 and time 2

S = Storage at time 1 and time 2

δt = Time interval between 2 and 1

The time interval, δt, must be consistent with the time interval used in developing the inflow hydrograph. The time interval used for a 24-hour storm is 10 minutes. The δt variable can be eliminated by dividing it into the storage variables to obtain the following rearranged equation:

$$I_1 + I_2 + 2S_1 - O_1 = O_2 + 2S_2$$

If the time interval, δt, is in minutes, the units of storage (S) are now cf/min which can be converted to cfs by multiplying by 1 min/60 sec.

The terms on the left-hand side of the equation are known from the inflow hydrograph and from the storage and outflow values of the previous time step. The unknowns O and S can be solved interactively from the given stage-storage and stage-discharge curves. The 1992 DOE stormwater manual or numerous hydrology texts can be consulted for examples.

<u>Sizing a Detention Facility for Multiple Design Storm Events</u>

To design a storage facility to meet performance requirements for 2, 10, and 100-year storm control, it is usually necessary to perform many iterative routings to arrive at a minimum size facility with the proper outlet (orifice) control. Most commercialized software packages perform these iterations automatically. If manual calculations are being performed, the 1992 DOE manual can be consulted for methods to reduce the number of iterations necessary.

5.4.5 Hydrograph Summation and Phasing

Hydrograph analysis allows the analysis of the cumulative effect of runoff from several basins and/or subbasins having different runoff characteristics and travel times. This cumulative effect is best characterized by a single hydrograph which is obtained by summing the individual hydrographs from tributary basins at a particular "discharge point of interest." The general procedure for performing a hydrograph summation is described below:

Hydrograph Summation

1. Select the "discharge point of interest" at which the hydrographs will be summed.
2. Estimate the time required for each hydrograph to travel from its point discharge to the "discharge point of interest." This travel time can be estimated using the methods presented in under "Travel Time and Time of Concentration."
3. Shift each hydrograph along the time axis a distance equal to its travel time to the "discharge point of interest".
4. Sum the shifted hydrographs by adding the ordinate flow values at each time interval.

Hydrograph Phasing Analysis

Hydrograph phasing analysis is required in order to determine the effect of the compound hydrograph shape on the downstream system.

The general procedure for performing a hydrograph phasing analysis is as follows:

1. Select the "discharge point of interest" at which the on-site and off-site runoff hydrographs will be summed and compute travel times as explained under "Hydrograph Summation."
2. Compute the pre-developed on-site hydrograph and the existing off-site hydrograph for the design storm of interest. Shift and sum these hydrographs as explained under "Hydrograph Summation."
3. Compute the post-developed on-site hydrograph. If on-site detention is provided, this hydrograph will be the outflow hydrograph from the facility. Shift and sum this hydrograph with the existing off-site hydrograph.
4. Plot the above two summations to obtain a comparison of cumulative effects.

A development with standard on-site detention can cause an increase in peak flow at some point downstream due to the interaction of on-site and off-site hydrographs. If this increase is significant, the City may require reduction of the release rate from the detention facility to provide a negligible downstream cumulative effect.

5.4.6 Volume Correction Factor

A *correction factor* is required when SCS-type methods and storms of 24-hour duration are used to design flow control BMPs. The correction factor increases the required detention volumes to account for the effects of back-to-back storm events in the Pacific Northwest (stormwater facilities often don't have time to empty completely between storm events). The volume of the facility is increased by a percentage equal to the correction factor found using Figure 5.1. No correction factor is necessary for the design of runoff treatment BMPs.

For example, on a site with 60% impervious cover, the correction factor is 0.35. If the storage volume necessary to meet the flow control requirements is 1,000 cubic feet, application of the correction factor would result in a total required volume of 1,000 cubic feet + 0.35(1,000 cubic feet) = 1,350 cubic feet.

Application of the correction factor is made *after* the flow control facility is sized. The additional volume shall be provided without increasing the storage depth of the facility, for example, by increasing the length of a pipe or vault with the same vertical dimension or by increasing the surface area of a pond or basin.

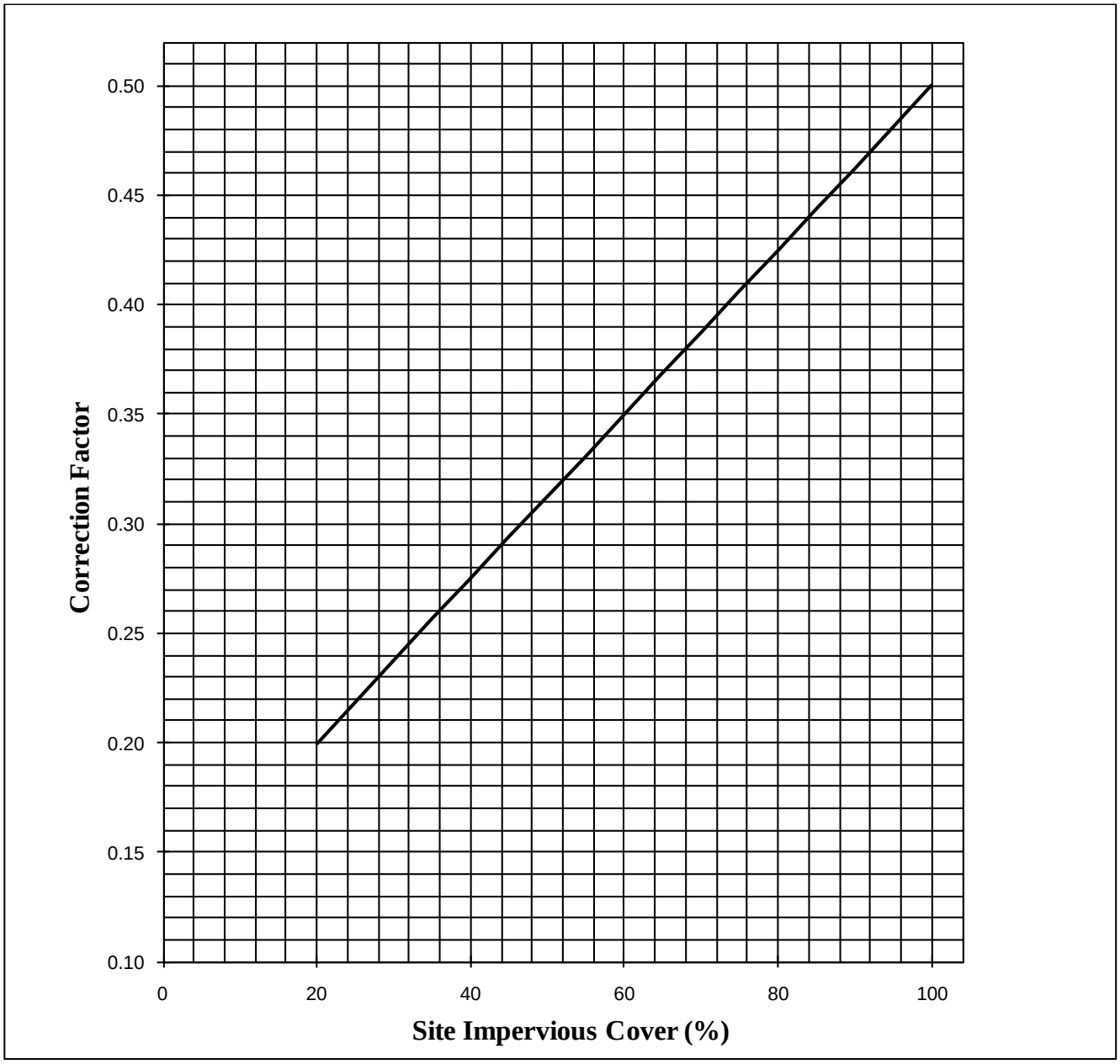

Figure 5.1 Volume Correction Factor

5.5 Closed Depression Analysis

A closed depression is a low-lying area which has no outlet, or such a limited surface outlet that in most storms events, the area acts as a retention basin and holds water for infiltration or evapo-transpiration.

The presence of a hydrologically significant closed depression on a site requires careful analysis, both of its role in the predeveloped condition hydrology and the effect that increased development runoff may have on the closed depression. Careful assessment of the existing hydrologic performance is required.

Closed depressions generally facilitate infiltration of runoff. If a closed depression is classified as a wetland or the discharge path flows through a wetland, then Minimum Requirement #8 for wetlands

applies. If there is an outflow from a closed depression to an applicable surface water, then the flow to the surface water must also meet the Minimum Requirement #7 for flow control.

Appropriate water quality treatment BMPs shall also be applied to all discharges to closed depressions. When selecting appropriate treatment BMPs, the engineer shall assume the soil is fully saturated all year within the closed depression unless the engineer provides supporting documentation for an alternative condition.

For projects that will disturb an acre or more of land, or that are part of a larger common plan of development or sale that will disturb an acre or more of land, a calibrated continuous simulation runoff model must be used for closed depression analysis and design of mitigation facilities. If a closed depression is not classified as a wetland, the ponding area at the bottom of the closed depression shall be modeled as an infiltration pond. Discharge to the depression may be allowed when the developed discharge matches existing durations for the range of discharges from 50 percent of the 2-year recurrence flow up to the full 50-year recurrence flow. In addition to matching flow durations, discharge rates must match the existing rates for the 2-, 10-, and 100-year recurrence flows.

The contributing area to each depression must be analyzed for the 100-year recurrence interval developed runoff condition. Potential overflow routes from the closed depression shall be determined, using a fully developed contributing basin, and the project engineer will identify and address potential adverse impacts.

For projects that will disturb less than an acre of land, and that are not part of a larger common plan of development or sale that will disturb an acre or more of land, the volume of runoff discharged to the closed depression after development shall not exceed the volume of runoff discharged to the closed depression under existing conditions for the 6 month, 2-year, 10 year, and 50 year, 24-hr storms.

Chapter 6 - Conveyance Systems and Hydraulic Structures

6.1 Overview

This section presents acceptable methods for the analysis and design of conveyance systems. It also includes sections on hydraulic structures which link the conveyance system to the runoff treatment and flow control facilities.

Material specifications for the components of conveyance systems, and standard details of these structures, are given in Section 4 of the City's Design and Construction Standards and Specifications.

Where space and topography permit, open conveyances are the preferred means of collecting and conveying stormwater.

6.2 Design Flows

The design event for each conveyance system category is as follows:

- The project's internal drainage system shall be designed for a 25-year recurrence interval peak flow from the contributing area.
- Culverts for and bridges over natural channels must convey the 100-year recurrence interval peak flow from the contributing area under fully developed conditions.
- Culverts and bridges must also be designed to meet fish passage, where applicable.
- All conveyances within public roads or other public rights of way shall be designed to pass a 25-year recurrence interval peak flow from the contributing area under fully developed conditions.

Design flows shall be determined in accordance with Chapter 5 of this volume.

6.3 Conveyance System Location

New conveyance system alignments that are not in dedicated tracts or right-of-way shall be located in drainage easements that are adjacent and parallel to property lines. The width of the permanent easement must be completely within a single parcel or tract and not split between adjacent properties. Topography and existing conditions are the only conditions under which a drainage easement may be placed that is not adjacent and parallel to a property line.

Requirements for conveyance system tracts and easements are discussed in Volume III, Chapter 2.4.

6.4 Pipe System Design Criteria

Pipe systems are networks of storm drain pipes, catch basins, manholes, and inlets designed and constructed to convey storm and surface water. The hydraulic analysis of flow in storm drain pipes is typically limited to "gravity flow"; however, in analyzing existing systems it may be necessary to address pressurized conditions.

6.4.1 Analysis Methods

Two methods of hydraulic analysis using Manning's Equation are used for the analysis of pipe systems. The first method is the Uniform Flow Analysis Method, commonly referred to as the

Manning's Equation, and is used for the design of new pipe systems and analysis of existing pipe systems.

The second method is the Backwater Analysis Method and is used to analyze the capacity of both proposed, and existing, pipe systems. If the City determines that, as a result of the project, runoff for any event up to and including the 100-year peak frequency flow would cause damage or interrupt vital services, a backwater (pressure sewer) analysis shall be required.

- When a backwater calculation is required, the design engineer shall analyze for the 25- and 100-year peak flows.
- For the 25-year peak flow, there shall be a minimum of one-half a foot of freeboard between the water surface and the top of any manhole or catch basin.
- For the 100-year peak flow, overtopping of the pipe conveyance system may occur; however, the additional flow shall not extend beyond half the lane width of the outside lane of the traveled way and shall not exceed 4 inches in depth at its deepest point. Off-channel storage on private property is allowed with recording of the proper easements. The additional flow shall be analyzed by open channel flow methods.
- Results shall be submitted in tabular and graphic format showing hydraulic and energy gradient.

When using the Manning's Equation for design, each pipe within the system shall be sized and sloped such that its barrel capacity at normal full flow is equal or greater than the required conveyance capacity as identified in Chapter 6.2.

Table 6.1 provides the recommended Manning's “n” values for preliminary design for pipe systems. (Note: The “n” values for this method are 15 percent higher in order to account for entrance, exit, junction, and bend head losses.)

Manning’s “n” values used for final pipe design must be documented in the Stormwater Site Plan.

Nomographs may also be used for sizing the pipes. For pipes flowing partially full, the actual velocity may be estimated from engineering nomographs by calculating Q_{full} and V_{full} and using the ratio of Q_{design}/Q_{full} to find V and d (depth of flow).

6.4.2 Acceptable Pipe Sizes

All storm drainage pipe within the public right of way, except as otherwise provided for in these standards, must have a minimum diameter of 12 inches. One exception is for cross-street connections from a concrete inlet to a Type 1 or 2 catch basin or manhole (CB leads). Under these conditions, plain concrete, 8-inch diameter storm sewer pipe may be used. All storm drainage pipe within a project shall have a minimum diameter of 8 inches. Storm sewer pipe used for private roof/footing/yard drain systems can be less than 8-inch diameter and sized according to the application.

Table 6.1 Recommended Manning's "n" Values for Preliminary Pipe Design.

	Analysis Method	
Type of Pipe Material	**Backwater Flow**	**Manning's Equation Flow**
A. Concrete pipe and CPEP-smooth interior pipe	0.012	0.014
B. Annular Corrugated Metal Pipe or Pipe Arch:		
1. 2⅔ x ½ inch corrugation (riveted)		
a. plain or fully coated	0.024	0.028
b. paved invert (40% of circumference paved):		
(1) flow full depth	0.018	0.021
(2) flow 0.8 depth	0.016	0.018
(3) flow 0.6 depth	0.013	0.015
c. treatment 5	0.013	0.015
2. 2.3 x 1-inch corrugation	0.027	0.031
3. 3.6 x 2-inch corrugation (field bolted)	0.030	0.035
C. Helical 2⅔ x ½-inch corrugation and CPEP-single wall	0.024	0.028
D. Spiral rib metal pipe and PVC pipe	0.011	0.013
E. Ductile iron pipe cement lined	0.012	0.014
F. High density polyethylene pipe (butt fused only)	0.009	0.009

6.5 Flow Splitter Designs

Many water quality facilities can be designed as flow-through or on-line systems with flows above the water quality design flow or volume simply passing through the facility at a lower pollutant removal efficiency. However, it is sometimes desirable to restrict flows to runoff treatment facilities and bypass the remaining higher flows around them (an off-line system) through the use of a flow splitter and bypass pipe or channel.

A crucial factor in designing flow splitters is to ensure that low flows are delivered to the treatment facility up to the water quality design flow rate. Above this rate, additional flows are diverted to the bypass system with minimal increase in head at the flow splitter structure to avoid surcharging the water quality facility under high flow conditions. Flow splitters may be used for purposes other than diverting flows to water quality facilities. However, the following discussion is generally focused on using flow splitters in association with water quality facilities.

The maximum head should be minimized for flow in excess of the water quality design flow. Specifically, flow to the water quality facility at the 100-year water surface should not increase the design water quality flow by more than 10 percent.

For ponding facilities, back water effects must be included in designing the height of the bypass elevation.

6.6 Energy Dissipation at Outfalls

Outlet protection is required at the outlets of all ponds, pipes, ditches, or other conveyances, and where runoff is conveyed to a natural or manmade drainage feature such as a stream, wetland, lake, or ditch.

At a minimum, all outfalls must be provided with a rock splash pad as specified in Table 6.2. For outfalls with a maximum flow velocity of less than 10 feet per second, a rock splash pad is acceptable. For velocities equal to or greater than 10 feet per second, an engineered energy dissipater must be provided.

All energy dissipation at outfalls shall be designed for the 100-year peak flow.

Flow dispersal trenches shall only be used at outfalls when both criteria below are met:

1. An outfall is necessary to disperse concentrated flows across uplands where no conveyance system exists and the natural (existing) discharge is unconcentrated; and
2. The 100-year peak flow is less than or equal to 0.5 cfs.

Outfall structures shall be located where they minimize impacts to fish, shellfish, and their habitats.

Note: A Hydraulic Project Approval (Chapter 77.55 RCW) and an Army Corps of Engineers permit may be required for any work within the ordinary high water mark. Other provisions of the RCW or the Hydraulics Code (Chapter 220-110 WAC) may also apply to outfalls into surface waters.

Table 6.2 Rock Protection at Outfalls.

Discharge Velocity at Design Flow in feet per second (fps)	Required Protection				
	Minimum Dimensions				
	Type	Thickness	Width	Length	Height
0 – 5	Rock lining(1)	1 foot	Diameter + 6 feet	8 feet *or* 4 x diameter, whichever is greater	Crown + 1 foot
5^+ – 10	Riprap(2)	2 feet	Diameter + 6 feet *or* 3 x diameter, whichever is greater	12 feet *or* 4 x diameter, whichever is greater	Crown + 1 foot
10^+ – 20	Gabion outfall	As required	As required	As required	Crown + 1 foot
20^+	Engineered energy dissipater required				

Footnotes:

(1) **Rock lining** shall be quarry spalls with gradation as follows:
Passing 8-inch square sieve: 100%
Passing 3-inch square sieve: 40 to 60% maximum
Passing ¾-inch square sieve: 0 to 10% maximum

(2) **Riprap** shall be reasonably well graded with gradation as follows:
Maximum stone size: 24 inches (nominal diameter)
Median stone size: 16 inches
Minimum stone size: 4 inches

Note: Riprap sizing governed by side slopes on outlet channel is assumed to be approximately 3:1.

6.7 Tightline Systems

A tightline system is typically a continuous length of pipe used to convey flows down a steep or sensitive slope with appropriate energy dissipation at the discharge end. The following criteria shall apply to the tighline:

1. Outfall tightlines may be installed in trenches with standard bedding on slopes up to 20%. In order to minimize disturbance to slopes greater than 20%, it is recommended that tightlines be placed at grade with proper pipe anchorage and support.
2. Tightlines or conveyances that traverse the marine intertidal zone and connect to outfalls must be buried to a depth sufficient to avoid exposure of the line during storm events or future changes in beach elevation. If non-native material is used to bed the tightline, such material shall be covered with at least 3 feet of native bed material or equivalent.
3. High density polyethylene pipe (HDPP) tightlines must be designed to address the material limitations, particularly thermal expansion and contraction and pressure design, as specified by the manufacturer. The coefficient of thermal expansion and contraction for solid wall polyethylene pipe (SWPE) is on the order of 0.001 inch per foot per Fahrenheit degree. Sliding sleeve connections must be used to address this thermal expansion and contraction. These sleeve connections consist of a section of the appropriate length of the next larger size diameter of pipe into which the outfall pipe is fitted. These sleeve connections must be located as close to the discharge end of the outfall system as is practical.

6.8 Flow Spreading Options

Flow spreaders function to uniformly spread flows across the inflow portion of several different water quality facilities (e.g., sand filters and filter strips). There are five flow spreader options presented in this section:

- Option A – Anchored plate
- Option B – Concrete sump box
- Option C – Notched curb
- Option D – Through-curb ports
- Option E – Interrupted curb

Any one of these options can be used when flow spreading is required by a treatment facility's design criteria.

Options A through C can be used for spreading concentrated or unconcentrated flows. In some cases, Options A through C can must be used, such as to correct for moderate grade changes along a filter strip.

Options D and E are only applicable for flows that are already unconcentrated and enter a filter strip.

Other flow spreader options may be possible with approval from the City.

6.8.1 General Design Criteria

For inflows greater than 5 cubic feet per second for the 100-year recurrence interval storm, a Type 1 catch basin shall be positioned in the spreader and the inflow pipe shall enter the catch basin

with flows exiting through the top grate. The top of the grate shall be lower than the level spreader plate, or if a notched spreader is used, lower than the bottom of the V-notches.

Option A – Anchored Plate (Figure 6.1)

An anchored plate flow spreader must be preceded by a sump having a minimum depth of 8 inches and minimum width of 24 inches. If not otherwise stabilized, the sump area must be lined to reduce erosion and to provide energy dissipation.

The top surface of the flow spreader plate must be level, projecting a minimum of 2 inches above the ground surface of the water quality facility, or V-notched with notches 6 to 10 inches on center and 1 to 6 inches deep (use shallower notches with closer spacing). Alternative designs may also be used.

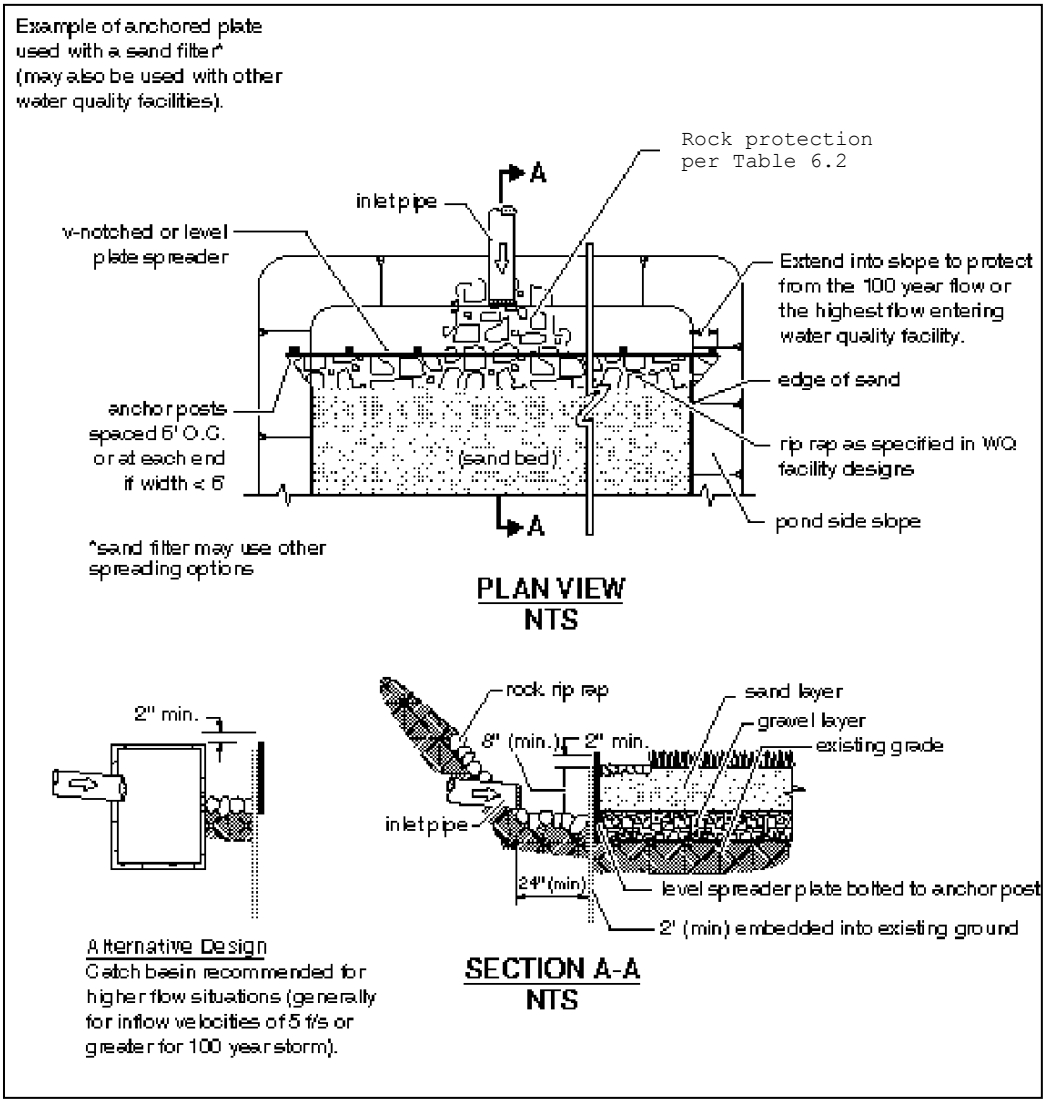

Figure 6.1 Flow Spreader – Anchored Plate

A flow spreader plate must extend horizontally beyond the bottom width of the facility to prevent water from eroding the side slope. The horizontal extent should be such that the bank is protected

for all flows up to the 100-year recurrence interval flow or the maximum flow that will enter the water quality facility. Flow spreader plates must be securely fixed in place.

Flow spreader plates may be made of either wood, metal, fiberglass reinforced plastic, or other durable material. If wood, pressure treated 4- by 10-inch lumber or landscape timbers are acceptable. Anchor posts must be 4-inch square concrete, tubular stainless steel, or other material resistant to decay.

Option B – Concrete Sump Box (Figure 6.2)

The wall of the downstream side of a concrete sump box must extend a minimum of 2 inches above the treatment bed. This serves as a weir to spread the flows uniformly across the bed.

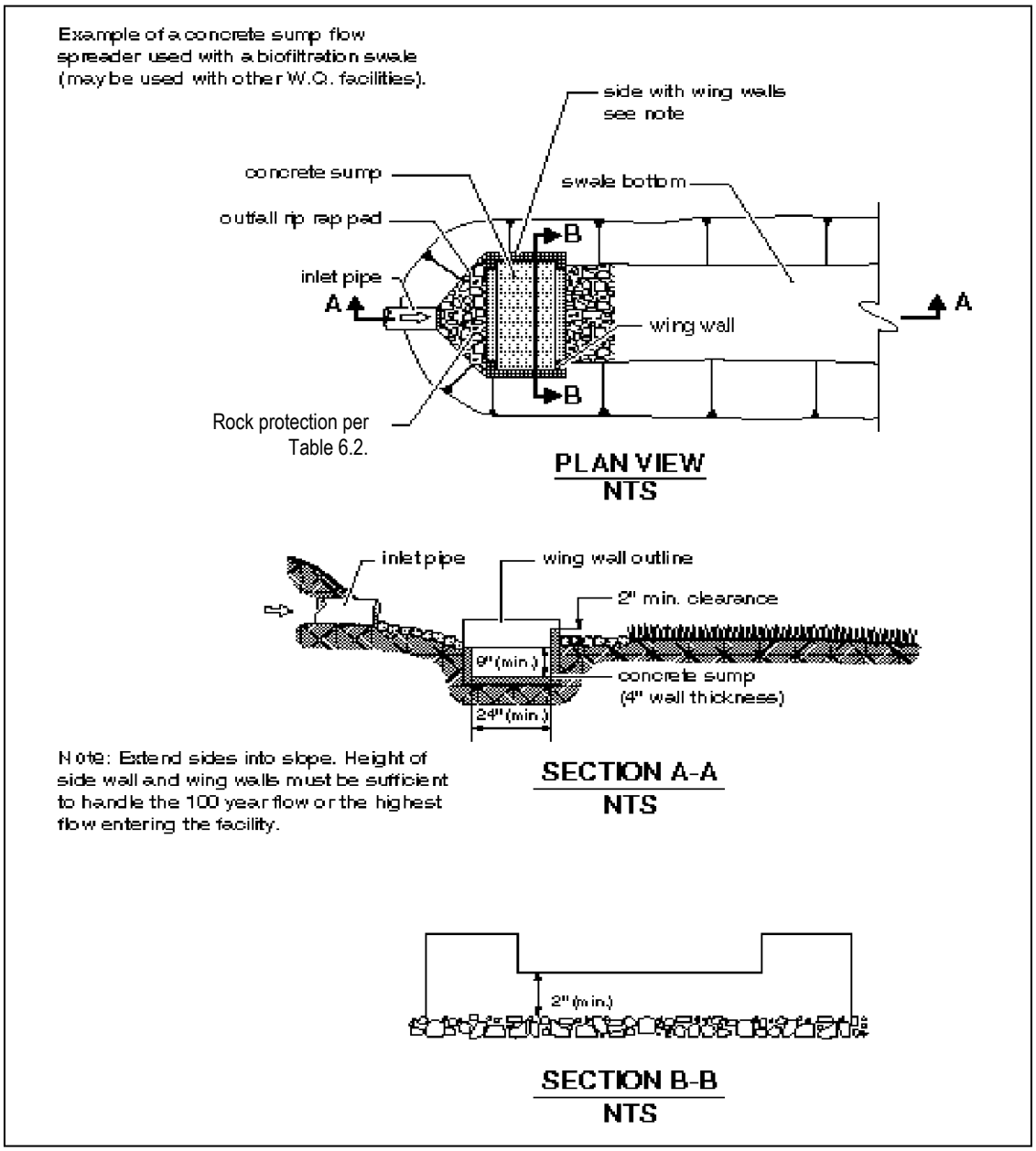

Figure 6.2 Flow Spreader – Concrete Sump Box

The downstream wall of a sump box must have "wing walls" at both ends. Side walls and returns must be slightly higher than the weir so that erosion of the side slope is minimized.

Concrete for a sump box can be either cast-in-place or precast, but the bottom of the sump must be reinforced with wire mesh for cast-in-place sumps.

Sump boxes must be placed over bases that consists of 4 inches of crushed rock, five-eighths-inch minus to help assure the sump remains level.

Option C – Notched Curb Spreader (Figure 5.3)

Notched curb spreader sections must be made of extruded concrete laid side-by-side and level. Typically five "teeth" per 4-foot section provide good spacing. The space between adjacent "teeth" forms a V-notch.

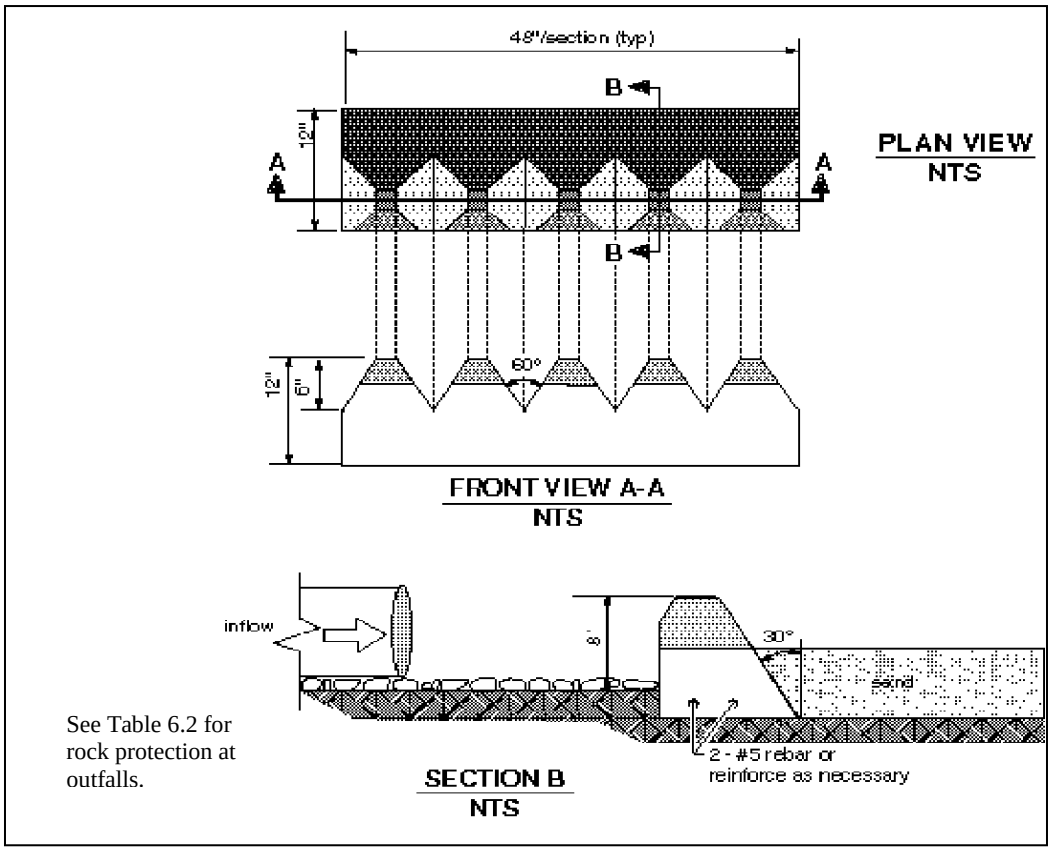

Figure 6.3 Flow Spreader – Notched Curb Spreader

Option D –Through-Curb Ports (Figure 6.4)

Unconcentrated flows from paved areas entering filter strips or continuous inflow biofiltration swales can use curb ports or interrupted curbs (Option E) to allow flows to enter the strip or swale. Curb ports use fabricated openings that allow concrete curbing to be poured or extruded while still providing an opening through the curb to admit water to the water quality facility.

Openings in the curb must be at regular intervals but at least every 6 feet (minimum). The width of each curb port opening must be a minimum of 11 inches. Approximately 15 percent or more of the curb section length should be in open ports, and no port should discharge more than about 10 percent of the flow.

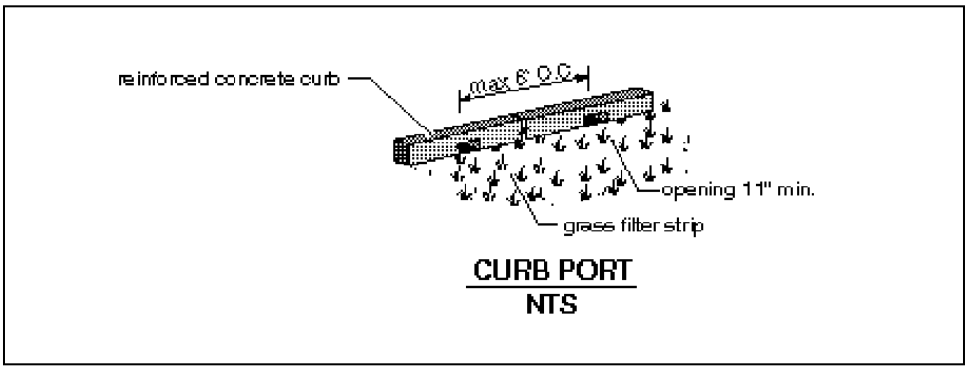

Figure 6.4 Flow Spreader – Through Curb Ports

Option E – Interrupted Curb (No Figure)

Interrupted curbs are sections of curb placed to have gaps spaced at regular intervals along the total width (or length, depending on facility) of the treatment area. At a minimum, gaps must be every 6 feet to allow distribution of flows into the treatment facility before they become too concentrated. The opening must be a minimum of 11 inches. As a general rule, no opening should discharge more than 10 percent of the overall flow entering the facility.

6.9 Culverts

For the purpose of this manual, culverts are defined as single runs of pipe that are open at each end and have no structures such as manholes or catch basins.

Approved pipe materials are detailed in Section 4.2.3(1) of the DCSS. Galvanized or aluminized pipe are not permitted in marine environments or where contact with salt water may occur, even infrequently through backwater events.

6.9.1 Culvert Design Criteria

Flow capacity shall be determined by analyzing inlet and outlet control for headwater depth. Nomographs used for culvert design shall be included in the submitted engineering Report.

All culverts shall be designed to convey the flows per Chapter 6.2. The maximum design headwater depth shall be 1.5 times the diameter of the culvert with no saturation of roadbeds. Minimum culvert diameters are as follows:

- For cross culverts under public roadways – minimum 18 inches, 12 inches if grade and cover do not allow for 18 inches.
- For roadside culverts, including driveway culverts, minimum 12 inches.
- For culverts on private property, minimum 8 inches.

Inlets and outlets shall be protected from erosion by rock lining, riprap, or bio-stabilization as detailed in Table 6.3.

Debris and access barriers are required on inlet and outlet ends of all culverts greater than 18 inches in diameter. Culverts greater than 36 inches in diameter within stream corridors are exempt.

Minimum culvert velocity shall be 2 feet per second and maximum culvert velocity shall be 15 feet per second. Thirty (30) feet per second may be used with an engineered outlet protection designed.

No maximum velocity for ductile iron or HDPE pipe shall be established but outlet protection shall be provided.

All CPEP and PVC culverts and pipe systems shall have concrete or rock headwalls at exposed pipe ends.

Bends are not permitted in culvert pipes.

Table 6.3 Open Conveyance Protection.

Velocity at Design Flow (fps)				
Greater Than	**Less Than or Equal To**	**Protection**	**Thickness**	**Min. Height Required Above Design Water Surface**
0	5	Grass Lining***	N/A	0.5 ft.
5	8	Riprap*, ***	1 ft.	2 ft.
8	12	Riprap **	2 ft.	2 ft.
12	20	Slope mattress, gabion, etc.	Varies	1 ft.

* Riprap shall be in accordance with Section 9-13.1 of the WSDOT/APWA standard specifications.
* Riprap shall be a reasonably well graded assortment of rock with the following gradation:
Maximum stone size 12”
Median stone size 8“
Minimum stone size 2“
** Riprap shall be reasonably well graded assortment of rock with the following gradation:
Maximum stone size 24“
Median stone size 16“
Minimum stone size 4“
Note: Riprap sizing governed by side slopes on channel, assumed ~3.1.
*** Bioengineered lining allowed for design flow up to 8 fps.

The following minimum cover shall be provided over culverts:

- 2 feet under roads.
- 1 foot under roadside applications and on private property, exclusive of roads.

If the minimum cover cannot be provided on a flat site, use ductile iron pipe and analyze for loadings.

- Maximum culvert length = 250 feet
- Minimum separation from other pipes:
  - 6 inches vertical (with bedding) and in accord with the City Sewer Utility Design criteria.
  - 3 feet horizontal.

Trench backfill shall be bankrun gravel or suitable native material compacted to 95 percent Modified Proctor test to a depth of 2 feet; 90 percent below 2 feet compacted in 8 inch to 12 inch lifts.

All driveway culverts shall be of sufficient length to provide a minimum 3:1 slope from the edge of the driveway to the bottom of the ditch. Culverts shall have beveled end sections to match the side slope.

6.9.2 Fish Passage Criteria

Culverts in stream corridors must meet any fish passage requirements of the WDFW.

6.10 Open Conveyances

Open conveyances can be either roadside ditches, grass lined swales, or a combination thereof. Consideration must be given to public safety when designing open conveyances adjacent to traveled ways and when accessible to the public. Where space and topography permit, open conveyances are the preferred means of collecting and conveying stormwater.

Open conveyances shall be designed by one of the following methods:

- Manning's Equation (for uniform flow depth, flow velocity, and constant channel cross-section)
- Direct Step Backwater Method (utilizing the energy equation)
- Standard Step Backwater Method (utilizing a computer program).

Velocities must be low enough to prevent channel erosion based on the native soil characteristics or the compacted fill material. For velocities above 5 feet per second, channels shall have either rock-lined bottoms and side slopes to the roadway shoulder top with a minimum thickness of 8 inches, or shall be stabilized in a fashion acceptable to the City. Water quality shall not be degraded due to passage through an open conveyance. See Table 6.3 for protection requirements.

Channels having a slope less than 6 percent <u>and</u> having peak velocities less than 5 feet per second should be lined with vegetation.

Channel side slopes shall not exceed 2:1 for undisturbed ground (cuts) as well as for disturbed ground (embankments). All constructed channels shall be compacted to a minimum 95 percent compaction as verified by a Modified Proctor test. Channel side slopes adjacent to roads shall not exceed 4:1 and will meet all other AASHTO and City road standards.

Channels shall be designed with a minimum freeboard of one-half-foot when the design flow is 10 cubic feet per second or less and 1 foot when the design discharge is greater than 10 cubic feet per second.

Check dams for erosion and sedimentation control may be used for stepping down channels being used for biofiltration.

6.11 Private Drainage Systems

The engineering analysis for a private drainage system is the same as for a City system.

6.11.1 Discharge Locations

Stormwater will not be permitted to discharge directly onto City roads or into a City system without the prior approval of the City, with the exception of Single Family Residences. Discharges to a City system shall be into a structure such as an inlet, catch basin, manhole, through an approved sidewalk underdrain or curb drain, or into an existing or created City ditch. Concentrated drainage will not be allowed to discharge across sidewalks, curbs, or driveways.

All buildings are required to have roof downspouts and subsurface drains directed to either an infiltration system, dispersion system, or to the stormwater drainage system. See Volume III, Chapter 12 for additional information on roof downspout infiltration and dispersion.

6.11.2 Drainage Stub-Outs

If drainage outlets (stub-outs) are to be provided for each individual lot, the stub-outs shall conform to the following:

- Each outlet shall be suitably located at the lowest elevation on the lot, so as to service all future roof downspouts and footing drains, driveways, yard drains, and any other surface or subsurface drains necessary to render the lots suitable for their intended use. Each outlet shall have free-flowing, positive drainage to an approved stormwater conveyance system or to an approved outfall location.
- Outlets on each lot shall be located with a 5-foot-high, 2- x 4-inch stake marked "storm" or "drain." For stub-outs to a surface drainage, the stub-out shall visibly extend above surface level and be secured to the stake.
- The developer and/or contractor are responsible for coordinating the locations of all stub-out conveyance lines with respect to the utilities (e.g., power, gas, telephone, television).
- All individual stub-outs shall be privately owned and maintained by the lot home owner including from the property line to the main storm drain line